YAMAHA

PARTS CATALOGUE
CATALOGO DE REPUESTOS

FZN250 (B8V1) COLOMBIA

YAMAHA
GENUINE
Parts & Accessories

1UB8V-261S1

( )

FZN250
CATALOGO DE REPUESTOS
©2019 por Yamaha Motor Co., Ltd.
1ª edición, junio 2019
Todos los derechos reservados.
Toda reproducción o uso no autorizado
sin el consentimiento escrito de
Yamaha Motor Co., Ltd.
quedan expresamente prohibidos
Impreso en Japón.

FZN250
PARTS CATALOGUE
©2019 by Yamaha Motor Co., Ltd.
1st edition, June 2019
All rights reserved.
Any reprinting or unauthorized use
without the written permission of
Yamaha Motor Co., Ltd.
is expressly prohibited.
Printed in Japan.

PROLOGO

Este catálogo de repuestos corresponde a las piezas para el o los modelos que figuran en la página de portada. Al formular el pedido de repuestos, se ruega citar este catálogo y especificar correctamente el número y el nombre de las piezas.

1. Las modificaciones y agregados que se hayan realizado después de la edición de este Catálogo de Repuestos, serán anunciados en las Informaciones de Recambios.
   Es recomendable que se hagan las correcciones necesarias en el Catálogo de Repuestos de acuerdo con las Informaciones de Recambios.

2. Abreviaciones
   En este. Catálogo de Repuestos se emplean las siguientes abreviaciones.

   “UR” Usar el número de partes especificado

   “UN” Usar la cantidad necesaria

   “AP” Piezas sustitutivas

   “LM” Fabricación local (Hay que pedir los repuestos en las cercanías)

   “F#” Nº de bastidor (Nº aplicable a la máquina)

   “O/S” Sobredimensionado

3. La cantidad de componentes para el montaje
   - Los componentes, suministrados como conjunto, se describen con un punto (.) que precede al nombre del parte como se indica a continuación.
   - La numeración que aparece a la derecha de cada descripción indica la cantidad de partes por cada unidad de conjunto.

CODIGO Nº	DESCRIPCION	CANT.	OBSERVACIONES
2F5–83310–60	ENSAMBLAJE DE LA LUZ	2	
115–83311–60	.BOMBILLA (6V–18W)	1	

4. Los colores de los componentes se indican como sigue en la columna de “OBSERVACIONES”.

CODIGO Nº	DESCRIPCION	CANT.	OBSERVACIONES
2N4–24110–00–X5	COMP. DEL TANQUE	2	MXR
3J1–24240–10	.GRAFICO, DEL TANQUE	1	PARA MXR

5. Debe tenerse en cuenta que las ilustraciones sirven como guia para la búsqueda de los números de partes y no deben usarse para el montaje. Durante el montaje, se recomienda usar el manual de taller correspondiente.

6. EL asterisco (*) antes del número de referencia indica los elementos modificados después de la primera edición.

FOREWORD

This Parts Catalogue is related to the parts for the model(s) on the cover page. When you are ordering replacement parts, please refer to this Parts Catalogue and quote both part numbers and part names correctly.

1. Modifications or additions which have been made after the issue of the Parts Catalogue will be announced in the Parts News.
   It is advisable that you make the necessary corrections to the Parts Catalogue according to the Parts News.

2. Abbreviations
   The following abbreviations are used in this Parts Catalogue.

   "UR" Use specified parts number.

   "UN" Use as many as needed.

   "AP" Alternate Parts

   "LM" Locally Made (Parts need to be ordered locally)

   "F#" Frame No. (Applicable machine No.)

   "O/S" Over Size

3. The number of components for assembly
   - Parts, which are to be supplied in an assembly, are listed with a dot (.) in front of the part name as shown below.
   - The numeral appearing to the right of each component part indicates the quantity of parts for each assembly unit.

PART NO.	DESCRIPTION	Q'TY	REMARKS
2F5–83310–60	FRONT FLASHER LIGHT ASSY	2	
115–83311–60	.BULB (6V–18W)	1	

4. Applicable colours of graphics are represented in the "REMARKS" as shown below.

PART NO.	DESCRIPTION	Q'TY	REMARKS
2N4–24110–00–X5	FUEL TANK COMP.	2	MXR
3J1–24240–10	.GRAPHIC, FUEL TANK	1	FOR MXR

5. Note that the illustrations for reference in finding parts numbers are not to be used for assembling. When assembling, please use the applicable service manual.

6. The asterisk (*) before a reference number indicates modified items after the first edition.

7. Números de serie

Nº de Serie del bastidor

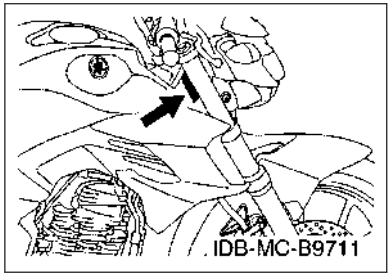

Nº de Serie del motor

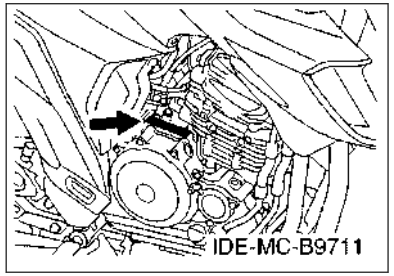

8. Códigos de color aplicables (El símbolo (*) muestra el color de modelo.)

Abreviatura	Nombre de color	Código de color
CM6	CYAN METALLIC 6	1344
MBL2(*)	MAT BLACK 2	0582
MDPBM1(*)	MAT DARK PURPLISH BLUE ME 1	1595
MNM3	MAT GRAY METALLIC 3	1278
S8	SILVER 8	0895
SMX(*)	BLACK METALLIC X	0903
YB	YAMAHA BLACK	0033

9. Nº de serie inicial aplicable

Nº de Serie del bastidor

Nº de serie	Nombre de la columna de cantidades	Código de Modelo

Nº de Serie del motor

Nº de serie	Nombre de la columna de cantidades	Código de Modelo

7. Applicable Serial No.

Frame Serial No.

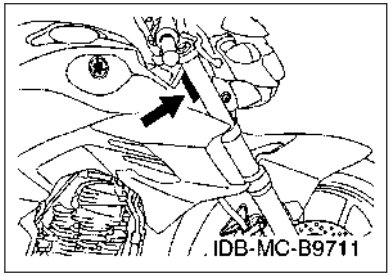

Engine Serial No.

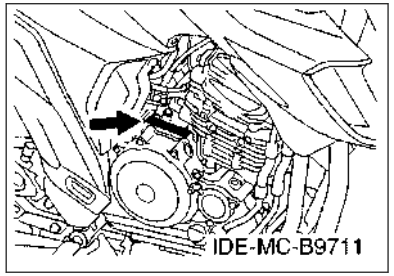

8. Applicable Colour Code (The (*) mark shows Model colour.)

Abbreviation	Colour Name	Colour Code
CM6	CYAN METALLIC 6	1344
MBL2(*)	MAT BLACK 2	0582
MDPBM1(*)	MAT DARK PURPLISH BLUE ME 1	1595
MNM3	MAT GRAY METALLIC 3	1278
S8	SILVER 8	0895
SMX(*)	BLACK METALLIC X	0903
YB	YAMAHA BLACK	0033

9. Applicable Starting Serial No.

Frame Serial No.

Serial No.	Name Of Q’ty Column	Model Code

Engine Serial No.

Serial No.	Name Of Q’ty Column	Model Code

CONTENIDO

MOTOR

CILINDRO....1
CIGUENAL & PISTON....2
VALVULA....3
ARBOL DE LEVAS & CADENA....4
BOMBA DE ACEITE....5
ADMISION....7
DESCARGA....9
CARTER....10
CUBIERTA DE CARTER 1....11
EMBRAGUE DEL ARRANQUE....13
EMBRAGUE....14
TRANSMISION....16
LEVA DE CAMBIO & HORQUILLA....17
EJE DE CAMBIO & PEDAL....18

SHASIS

CUADRO....19
GUARDABARRO....20
CUBIERTA LATERAL....22
BRAZO TRASERO & SUSPENSION....24
DIRECCION....25
HORQUILLA DELANTERA....26
DEPOSITO DE COMBUSTIBLE....28
DEPOSITO DE COMBUSTIBLE 2....30
ASIENTO....32
RUEDA DELANTERA....33
CALIBRE FRENO DELANTERA....34
RUEDA TRASERA....35
CALIBRE FRENO TRASERA....36
MANILLAR & CABLE....37
CILINDRO MAESTRO DELANTERO....38
SOPORTE & APOYAPIE....39
CILINDRO MAESTRO TRASERO....42
GENERADOR....43
MOTOR DE ARRANQUE....44
LUZ DE DESTELLADOR....45
MEDIDOR....47
FARO DELANTERO....48
LUZ DE COLA....50
INTERRUPTOR DE MANILLAR&PALANC....51
EQUIPO ELECTRICO 1....52
EQUIPO ELECTRICO 2....53

INDICE

INDICE NUMERICO....54

CONTENTS

ENGINE

CYLINDER....1
CRANKSHAFT & PISTON....2
VALVE....3
CAMSHAFT & CHAIN....4
OIL PUMP....5
INTAKE....7
EXHAUST....9
CRANKCASE....10
CRANKCASE COVER 1....11
STARTER CLUTCH....13
CLUTCH....14
TRANSMISSION....16
SHIFT CAM & FORK....17
SHIFT SHAFT....18

CHASSIS

FRAME....19
FENDER....20
SIDE COVER....22
REAR ARM & SUSPENSION....24
STEERING....25
FRONT FORK....26
FUEL TANK....28
FUEL TANK 2....30
SEAT....32
FRONT WHEEL....33
FRONT BRAKE CALIPER....34
REAR WHEEL....35
REAR BRAKE CALIPER....36
STEERING HANDLE & CABLE....37
FRONT MASTER CYLINDER....38
STAND & FOOTREST....39
REAR MASTER CYLINDER....42
GENERATOR....43
STARTING MOTOR....44
FLASHER LIGHT....45
METER....47
HEADLIGHT....48
TAILLIGHT....50
HANDLE SWITCH & LEVER....51
ELECTRICAL 1....52
ELECTRICAL 2....53

INDEX

NUMERICAL INDEX....54

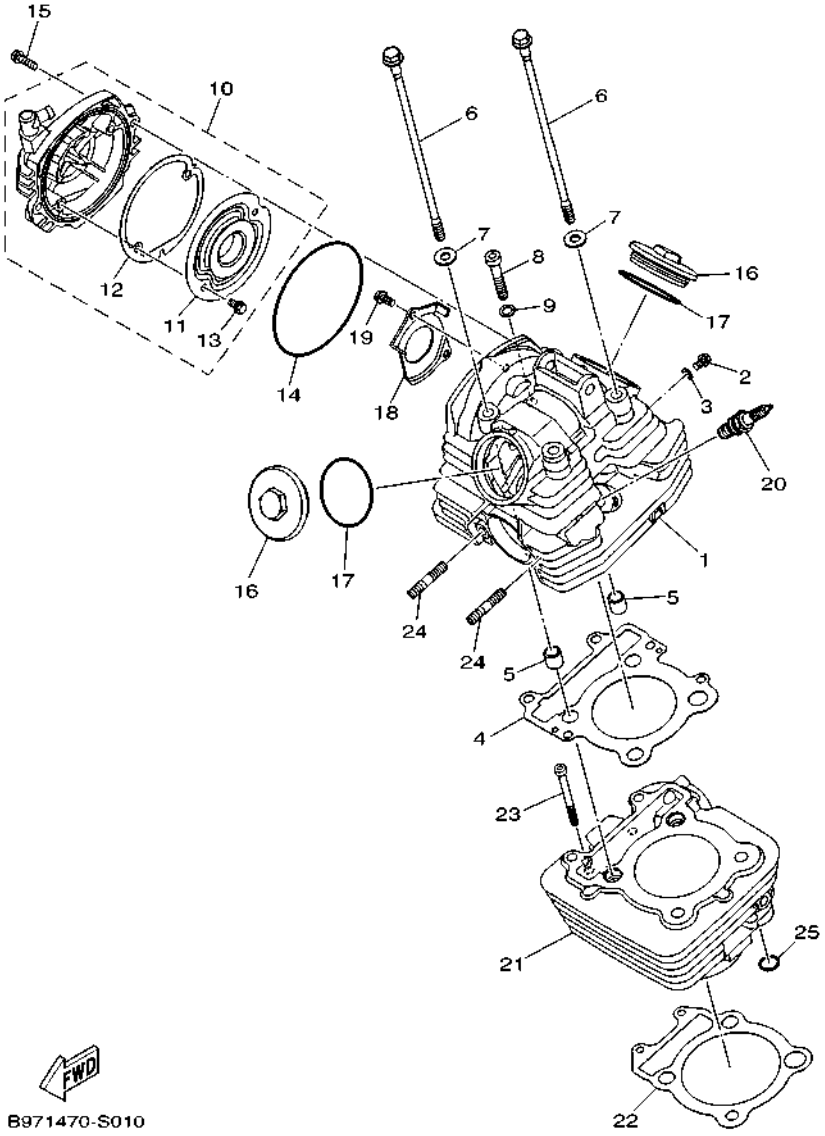

FIG. 1 CILINDRO — CYLINDER

REF. Nº	CODIGO Nº PART NO.	DESCRIPCION DESCRIPTION	B8V1					OBSERVACIONES REMARKS
1	B97–E1111–00	CULATA CILINDRO 1 HEAD, CYLINDER 1	1					
2	95027–06010	PERNO, DE BRIDA BOLT, FLANGE	1					
3	90430–06817	JUNTA GASKET	1					
4	1S4–11181–10	JUNTA, DE CULATA 1 GASKET, CYLINDER HEAD 1	1					
5	99530–14016	PASADOR, DE ESPIGA PIN, DOWEL	2					
6	90105–08117	TORNILLO BOLT, FLANGE	4					
7	90201–08609	ARANDELA PLANA WASHER, PLATE	4					
8	91312–08045	TORNILLO ALLEN BOLT, HEXAGON SOCKET HEAD	2					
9	90201–06018	ARANDELA PLANA WASHER, PLATE	2					
10	B97–E1190–00	TAPA CULATA DE CILINDRO 1 COVER, CYLINDER HEAD 1	1					
11	B97–E1165–00	.PLACA RESPIRADERO .PLATE, BREATHER	1					
12	B97–E1196–00	.EMPAQUE DE CULATA .GASKET, CYLINDER HEAD SIDE	1					
13	95022–06010	.PERNO, DE BRIDA .BOLT, FLANGE	2					
14	93211–058A2	ANILLO O O-RING	1					
15	95022–06020	PERNO, DE BRIDA BOLT, FLANGE	2					
16	B97–E1186–00	CUBIERTA CULATA CIL.LAT.2 COVER, CYLINDER HEAD SIDE 2	2					
17	93210–54804	ANILLO O O-RING	2					
18	B97–E111F–00	PLACA PLATE	1					
19	95022–06012	PERNO, DE BRIDA BOLT, FLANGE	2					
20	94703–00333	BUJIA (NGK DR8EA) PLUG, SPARK (NGK DR8EA)	1					
21	1S4–E1311–21–A0	CILINDRO 1 CYLINDER 1	1					
22	B97–E1351–01	JUNTA, DE CILINDRO GASKET, CYLINDER	1					
23	91312–06065	TORNILLO ALLEN BOLT, HEXAGON SOCKET HEAD	2					
24	90116–08023	ESPARRAGO BOLT, STUD	2					
25	93210–13802	ANILLO O O-RING	1					

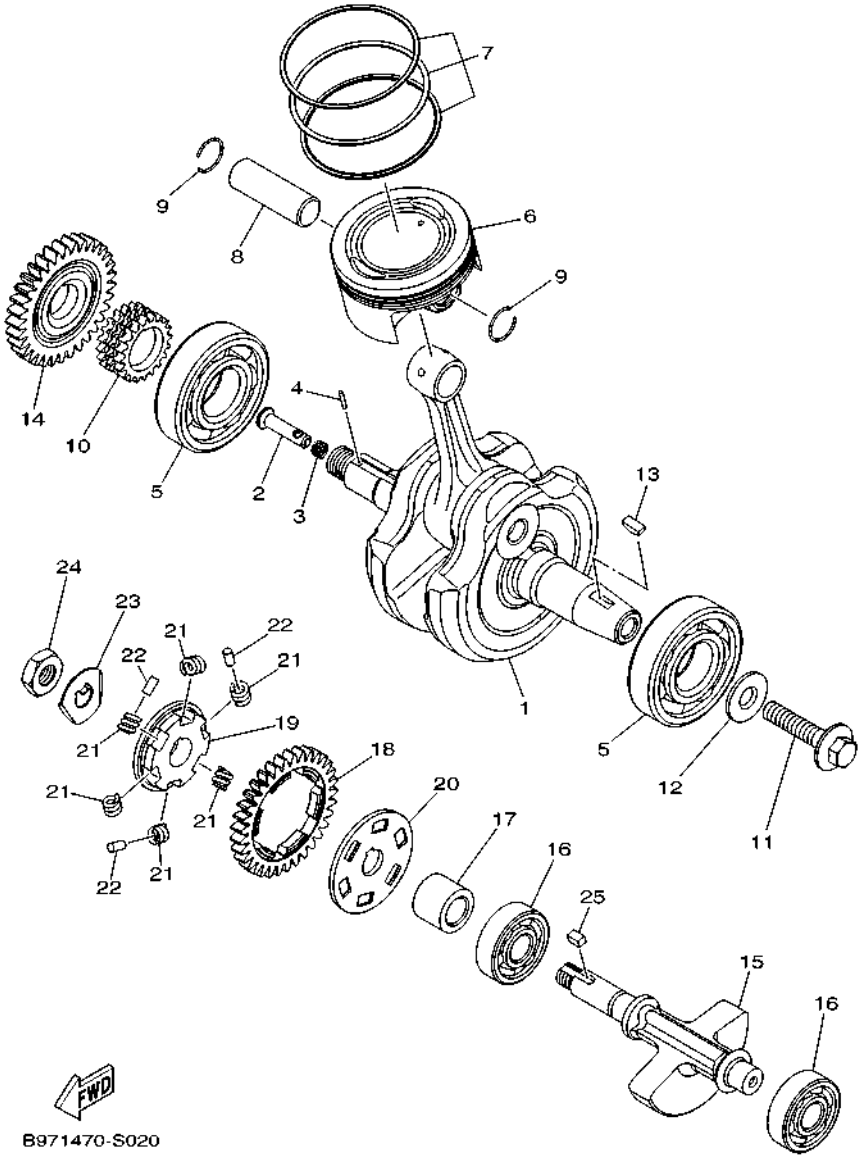

FIG. 2 CIGUENAL & PISTON — CRANKSHAFT & PISTON

REF. Nº	CODIGO Nº PART NO.	DESCRIPCION DESCRIPTION	B8V1					OBSERVACIONES REMARKS
1	B97–E1400–00	CIGUENAL COMPLETO CRANKSHAFT ASSY	1					
2	90240–07105	PASADOR CON HOYO PIN, CLEVIS	1					
3	90501–07629	RESORTE DE COMPRESION SPRING, COMPRESSION	1					
4	93602–13800	PASADOR DE CLAVIJA PIN, DOWEL	1					
5	93306–378Y2	COJINETE BEARING	2					
6	B97–E1631–00	PISTON (NORMA) PISTON (STD)	1					
7	B97–E1603–00	JUEGO DE ANILLOS (NORMA) PISTON RING SET (STD)	1					
8	12B–E1633–00	PASADOR, PISTON PIN, PISTON	1					
9	90468–12069	PRESILLA CLIP	2					
10	B97–E1549–00	CATALINA CADENA DE LEVA SPROCKET, CAM CHAIN	1					
11	90105–10430	TORNILLO BOLT, FLANGE	1					
12	90201–102R1	ARANDELA PLANA WASHER, PLATE	1					
13	90280–05013	CUNA WOODRUFF KEY, WOODRUFF	1					
14	B97–E1536–00	ENGRANAJE TRACCION GEAR, DRIVE	1					
15	B97–E1454–00	PESO 1 WEIGHT 1	1					
16	93306–302X8	COJINETE BEARING	2					
17	B97–E1478–00	COLLAR COLLAR	1					
18	B97–E1531–00	ENGRANAJE CONTRAPESO GEAR, BALANCE WEIGHT	1					
19	B97–E1496–00	COPA TOPE BOSS, BUFFER	1					
20	B97–E1533–00	PLACA DE AMORTIGUADOR PLATE, ABSORBER	1					
21	90501–22800	RESORTE DE COMPRESION SPRING, COMPRESSION	6					
22	93605–10838	PASADOR DE CLAVIJA PIN, DOWEL	3					
23	90215–12272	ARANDELA DE CIERRE WASHER, LOCK	1					
24	90170–12370	TUERCA NUT	1					
25	90282–05804	CHAVETA, RECTA KEY, STRAIGHT	1					

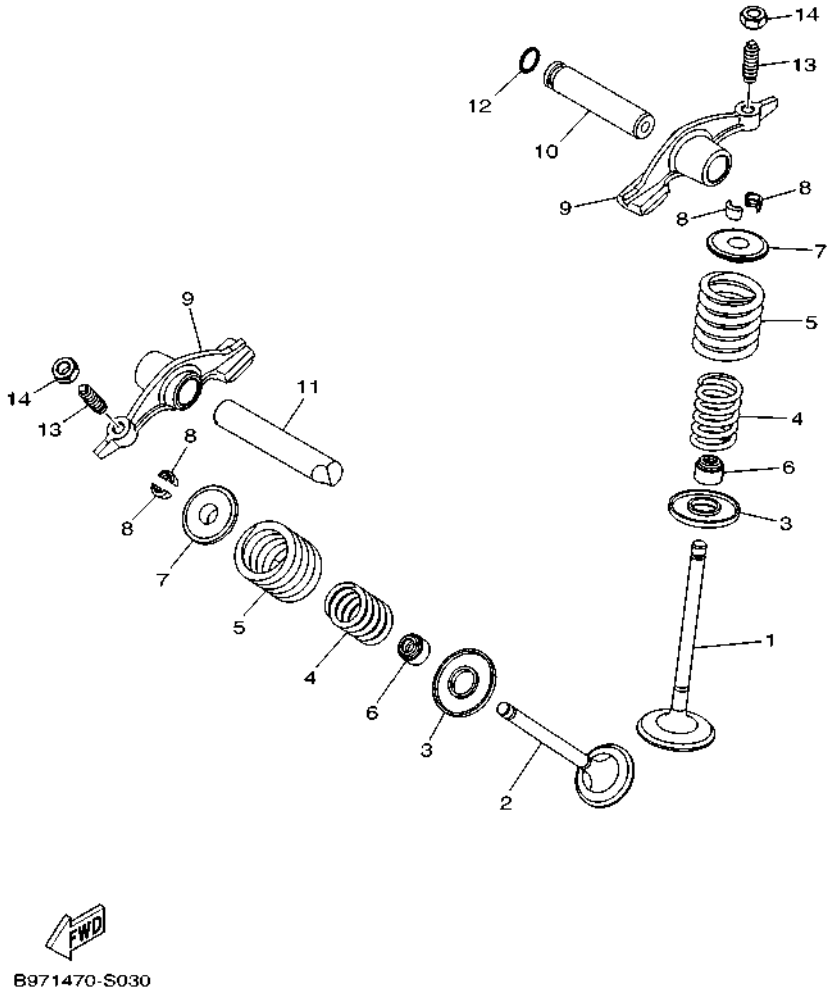

FIG. 3 VALVULA — VALVE

REF. Nº	CODIGO Nº PART NO.	DESCRIPCION DESCRIPTION	B8V1					OBSERVACIONES REMARKS
1	5H0–12111–02	VALVULA DE ADMISION VALVE, INTAKE	1					
2	B97–E2121–00	VALVULA DE ESCAPE VALVE, EXHAUST	1					
3	B97–E2116–00	ASIENTO RESORTE DE VALVULA SEAT, VALVE SPRING	2					
4	B97–E2113–00	RESORTE VALVULA INTERNA SPRING, VALVE INNER	2					
5	B97–E2114–00	RESORTE VALVULA EXTERIOR SPRING, VALVE OUTER	2					
6	5BP–E2119–00	SELLO DE ACEITE VALVULA SEAL, VALVE STEM	2					
7	B97–E2117–00	RETEN RESORTE DE VALVULA RETAINER, VALVE SPRING	2					
8	5BP–E2118–00	SEGURO DE VALVULA LOCK, VALVE SPRING RETAINER	4					
9	B97–E2151–00	BRAZO DE BALANCIN DE VALVULA ARM, VALVE ROCKER	2					
10	B97–E2156–00	EJE DE BALANCIN SHAFT, ROCKER 2	1					
11	B97–E2146–00	ARBOL DE BALANCIN SHAFT, ROCKER	1					
12	93210–09894	ANILLO O O-RING	1					
13	B97–E2159–00	TORNILLO DE AJUSTE DE VALVULA SCREW, VALVE ADJUSTING	2					
14	90170–06128	TUERCA NUT	2					

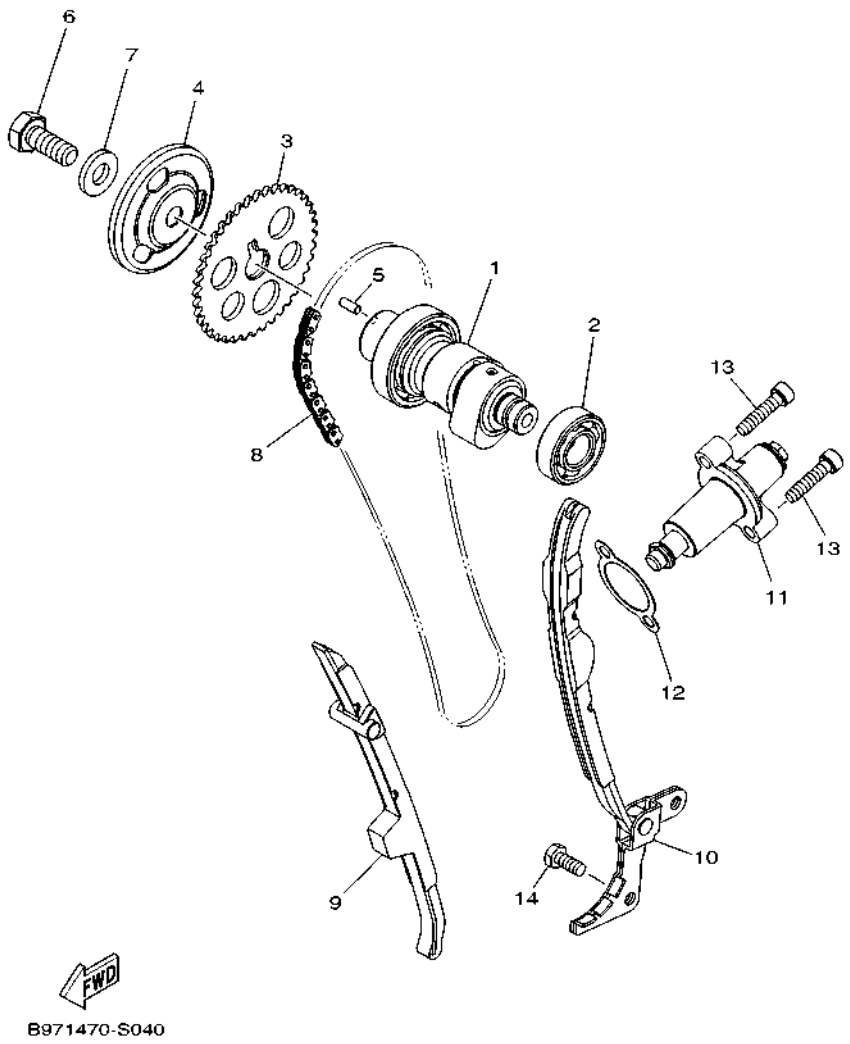

FIG. 4 ARBOL DE LEVAS & CADENA — CAMSHAFT & CHAIN

REF. Nº	CODIGO Nº PART NO.	DESCRIPCION DESCRIPTION	B8V1					OBSERVACIONES REMARKS
1	B97–E2170–00	ARBOL DE LEVAS COMPLETO 1 CAMSHAFT ASSY 1	1					
2	93306–252Y4	COJINETE BEARING	1					
3	B97–E2176–00	CATALINA DE CADENA SPROCKET, CAM CHAIN	1					
4	B97–E1145–00	PLACA RESPIRADERO 2 PLATE, BREATHER 2	1					
5	93604–10011	PASADOR DE CLAVIJA PIN, DOWEL	1					
6	90101–10852	TORNILLO BOLT	1					
7	90201–10591	ARANDELA PLANA WASHER, PLATE	1					
8	94568–A4104	CADENA CHAIN	1					
9	B97–E2231–00	TOPE DE GUIA 1 GUIDE, STOPPER 1	1					
10	B97–E2241–00	TOPE DE GUIA 2 GUIDE, STOPPER 2	1					
11	5XT–12210–00	TENSOR CADENA DE LEVA TENSIONER ASSY, CAM CHAIN	1					
12	B97–E2213–00	EMPAQUE DE CAJA TENSOR GASKET, TENSIONER CASE	1					
13	91312–06025	TORNILLO ALLEN BOLT, HEXAGON SOCKET HEAD	2					
14	97012–06014	PERNO BOLT	2					

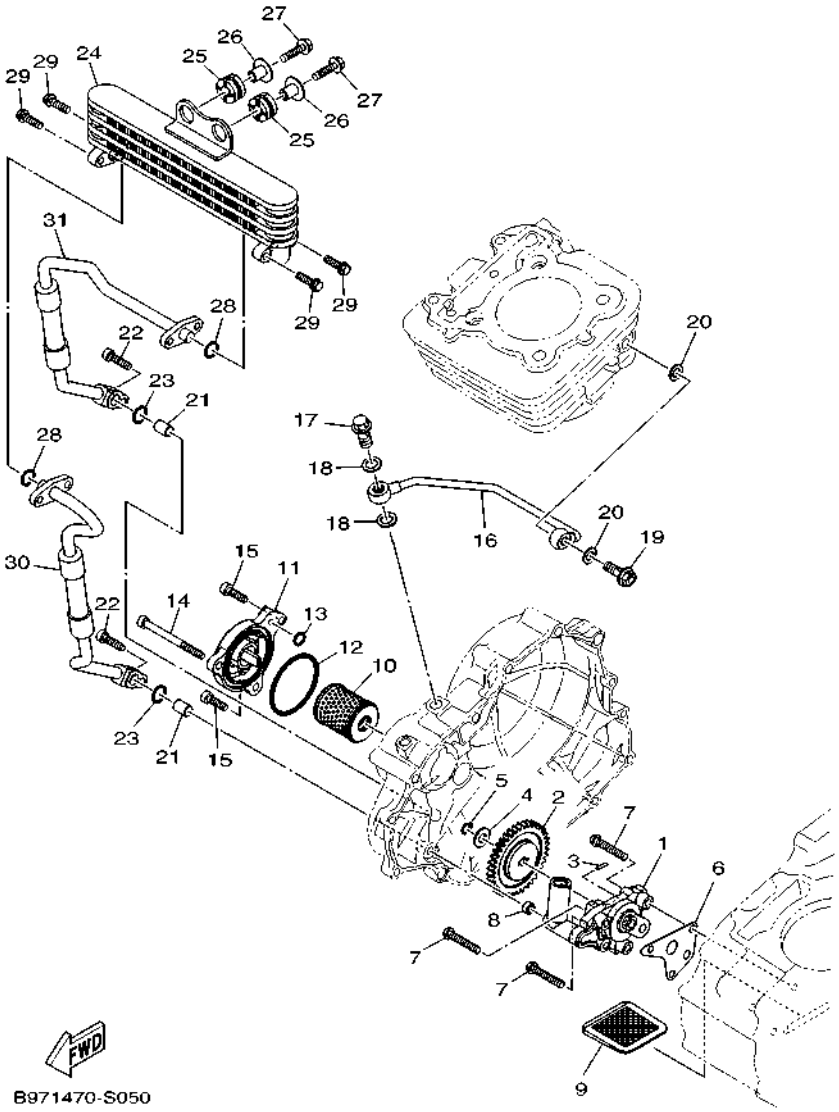

FIG. 5 BOMBA DE ACEITE — OIL PUMP

REF. Nº	CODIGO Nº PART NO.	DESCRIPCION DESCRIPTION	B8V1					OBSERVACIONES REMARKS
1	B97–E3300–00	BOMBA DE ACEITE COMPLETA OIL PUMP ASSY	1					
2	B97–E3326–00	ENGRANAJE IMPULSOR DE BOMBA 2 GEAR, PUMP DRIVEN 2	1					
3	93603–12804	PASADOR DE CLAVIJA PIN, DOWEL	1					
4	90201–08882	ARANDELA PLANA WASHER, PLATE	1					
5	93410–00837	SEGURO CIRCLIP	1					
6	B97–E3329–00	EMPAQUE TAPA DE BOMBA GASKET, PUMP COVER	1					
7	92012–06035	PERNO BOLT, BUTTON HEAD	3					
8	90430–06802	JUNTA GASKET	1					
9	4LS–E3411–00	FILTRO DE ACEITE STRAINER, OIL	1					
10	38B–E3440–00	ELEMENTO FILTRO DE ACEITE ELEMENT ASSY, OIL CLEANER	1					
11	B97–E3447–00	TAPA DEL ELEMENTO COVER, OIL ELEMENT	1					
12	93210–548A1	ANILLO O O-RING	1					
13	93210–07896	ANILLO O O-RING	1					
14	91312–06070	TORNILLO ALLEN BOLT, HEXAGON SOCKET HEAD	1					
15	91312–06020	TORNILLO ALLEN BOLT, HEXAGON SOCKET HEAD	2					
16	B97–E3161–00	TUBO CONDUCTOR 1 PIPE, DELIVERY 1	1					
17	90401–10046	PERNO DE UNION BOLT, UNION	1					
18	90430–10171	JUNTA GASKET	2					
19	90401–08007	PERNO DE UNION BOLT, UNION	1					
20	90430–08119	JUNTA GASKET	2					
21	91810–14809	PASADOR DE CLAVIJA PIN, DOWEL	2					
22	91312–06025	TORNILLO ALLEN BOLT, HEXAGON SOCKET HEAD	2					
23	93210–10817	ANILLO O O-RING	2					
24	B97–E3470–00	ENFRIADOR DE ACEITE COMPLETO OIL COOLER ASSY	1					
25	90480–16802	TAPON GROMMET	2					
26	90387–06876	ESPACIADOR COLLAR	2					
27	95812–06025	TORNILLO DE REBORDE BOLT, FLANGE	2					

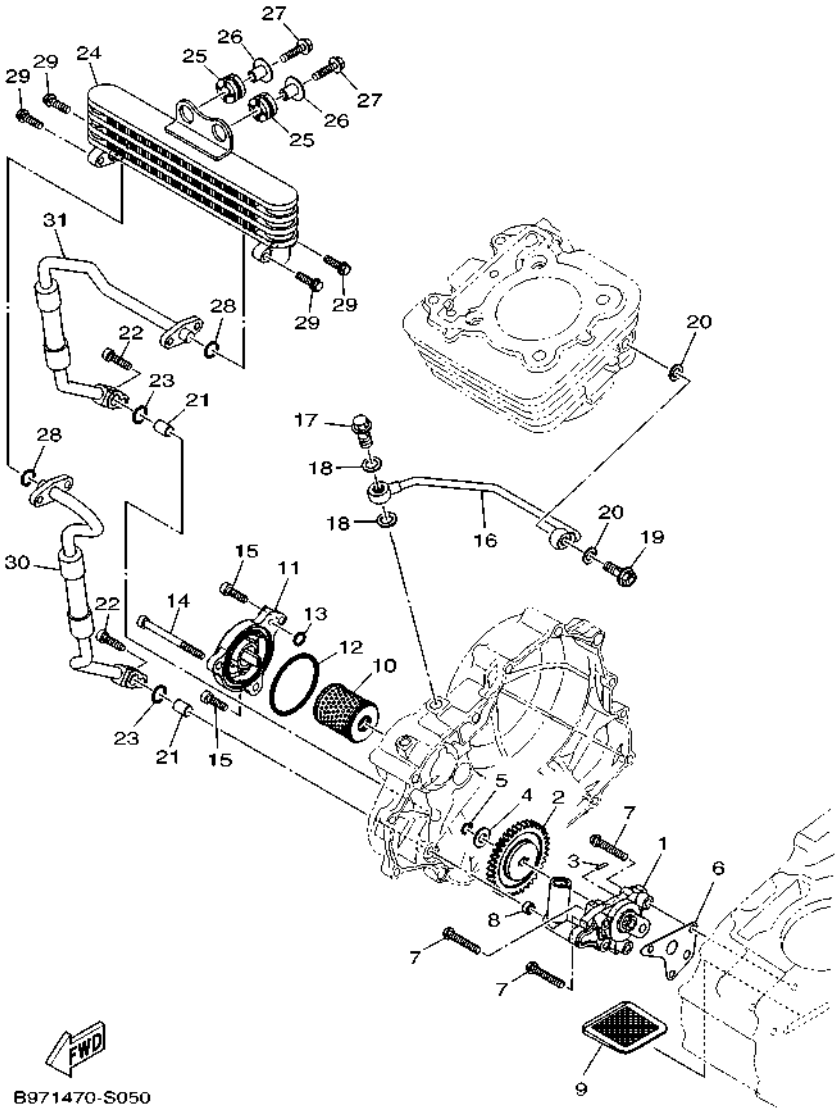

FIG. 5 BOMBA DE ACEITE — OIL PUMP

REF. Nº	CODIGO Nº PART NO.	DESCRIPCION DESCRIPTION	B8V1					OBSERVACIONES REMARKS
28	93210–10817	ANILLO O O-RING	2					
29	95027–06020	PERNO, DE BRIDA BOLT, FLANGE	4					
30	B97–E3464–00	MANGUERA DE ACEITE 1 HOSE, OIL 1	1					
31	B97–E3465–00	MANGUERA DE ACEITE 2 HOSE, OIL 2	1					

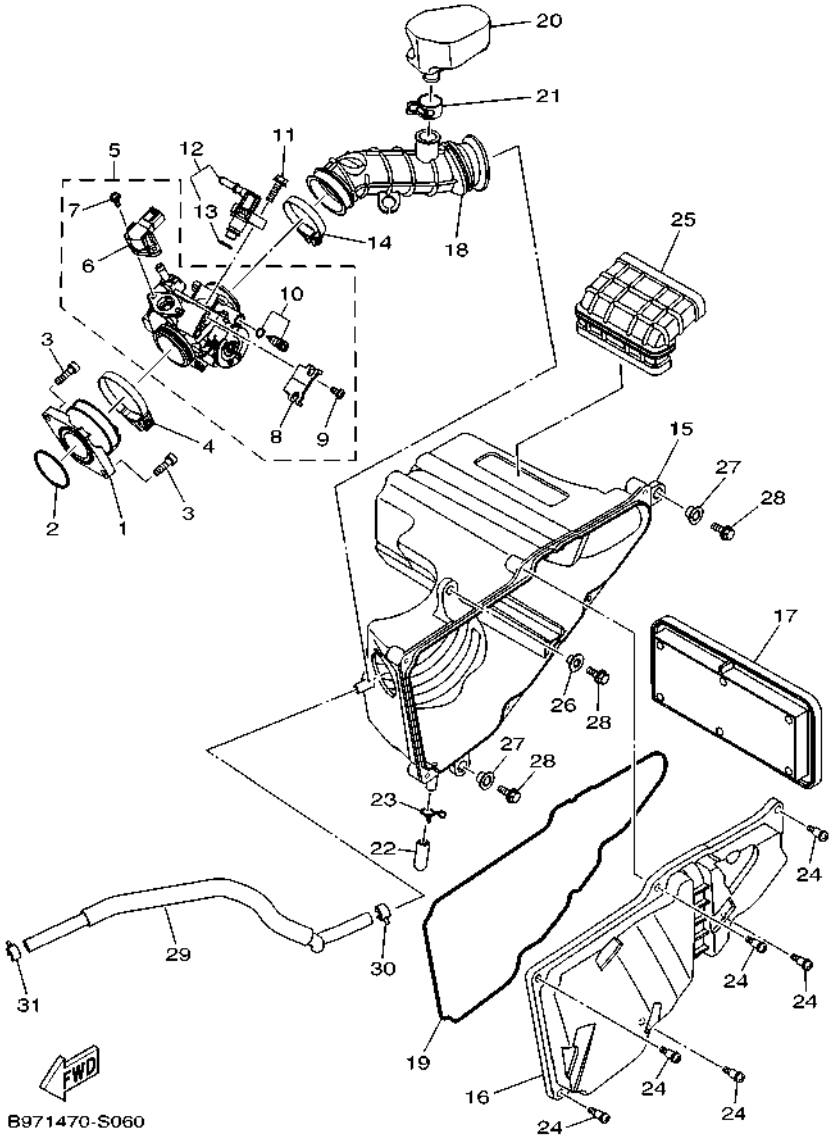

FIG. 6 ADMISION INTAKE

REF. Nº	CODIGO Nº PART NO.	DESCRIPCION DESCRIPTION	B8V1					OBSERVACIONES REMARKS
1	B97–E3585–00	MULTIPLE MANIFOLD	1					
2	93210–39802	ANILLO O O-RING	1					
3	91317–06020	TORNILLO ALLEN BOLT,HEX.SOCKET HEAD	2					
4	90450–55003	BRIDA, MANGUERA HOSE CLAMP ASSY	1					
5	B8H–E3750–00	CAJA DE ACELERADOR COMPL. THROTTLE BODY ASSY	1					
6	2S5–1410H–00	.SOLENOIDE VALVULA .FUEL CUT SOLENOID VALVE	1					
7	1S4–14216–00	.TORNILLO .SCREW	2					
8	1S4–E4571–00	.SOPORTE DE OBTURADOR .BRACKET, THROTTLE	1					
9	98502–05010	.TORNILLO .SCREW, PAN HEAD	2					
10	1S4–14104–00	.CJTO. TORNNILLO DE AIRE .AIR SCREW SET	1					
11	95822–06020	TORNILLO DE REBORDE BOLT, FLANGE	1					
12	B97–E3770–00	INYECTOR INJECTOR ASSY	1					
13	5CA–E4147–00	.ANILLO O .O-RING	1					
14	90450–46803	BRIDA, MANGUERA HOSE CLAMP ASSY	1					
15	B97–E4411–00	CAJA FILTRO DEL AIRE 1 CASE, AIR CLEANER 1	1					
16	B97–E4412–00	TAPA CAJA DEL FILTRO 1 CAP, CLEANER CASE 1	1					
17	B97–E4450–00	ELEMENTO COMP.FILTRO DE AIRE ELEMENT ASSY, AIR CLEANER	1					
18	B97–E4453–00	UNION DEL FILTRO DEL AIRE 1 JOINT, AIR CLEANER 1	1					
19	2GS–E4452–00	SELLO SEAL	1					
20	B97–E4877–00	RESONATOR RESONATOR	1					
21	90467–20050	PRESILLA CLIP	1					
22	20P–E443E–00	TUBO, DRENAJE PIPE, DRAIN	1					
23	90467–12800	PRESILLA CLIP	1					
24	97602–05320	TORNILLO CON RONDONA SCREW, PAN HEAD WITH WASHER	6					
25	B97–E4437–00	CONDUCTO DUCT	1					
26	90387–06737	ESPACIADOR COLLAR	1					
27	90387–09806	ESPACIADOR COLLAR	2					

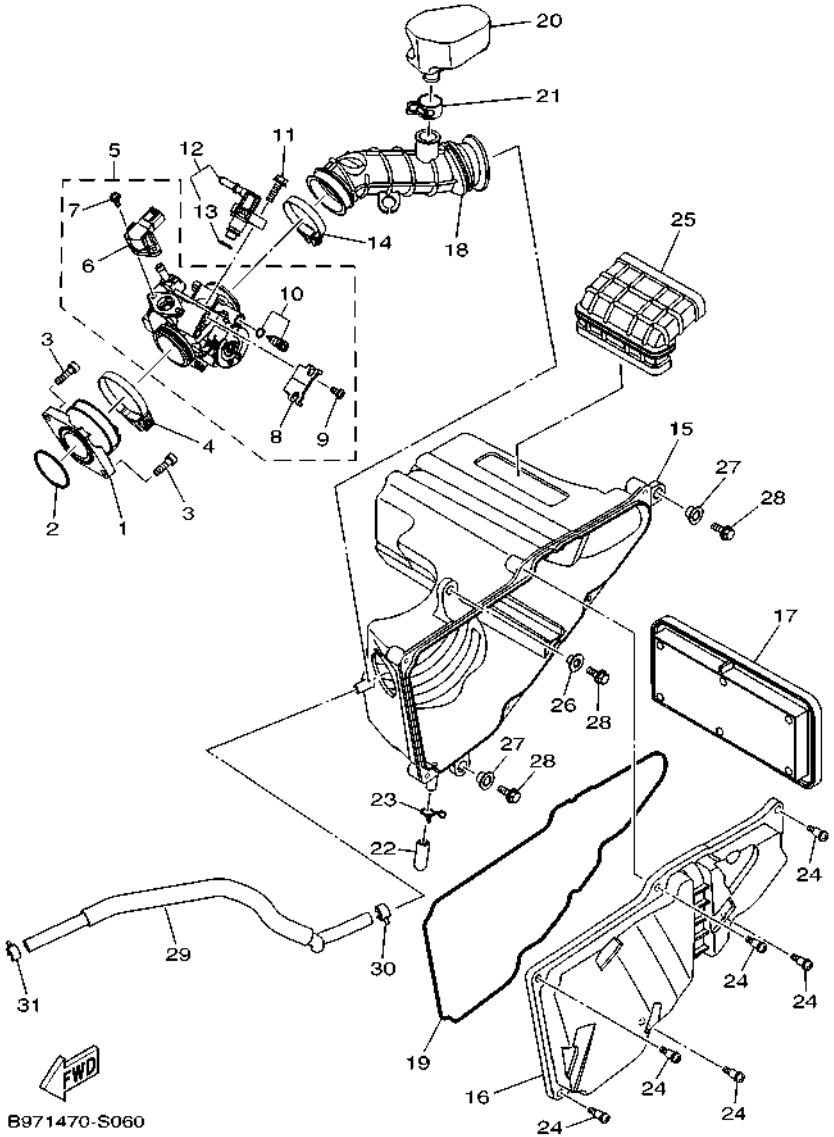

FIG. 6 ADMISION — INTAKE

REF. Nº	CODIGO Nº PART NO.	DESCRIPCION DESCRIPTION	B8V1					OBSERVACIONES REMARKS
28	95822–06016	TORNILLO DE REBORDE BOLT, FLANGE	3					
29	B97–E1166–00	TUBO RESPIRADERO 1 PIPE, BREATHER 1	1					
30	90467–13816	PRESILLA CLIP	1					
31	90467–13816	PRESILLA CLIP	1					

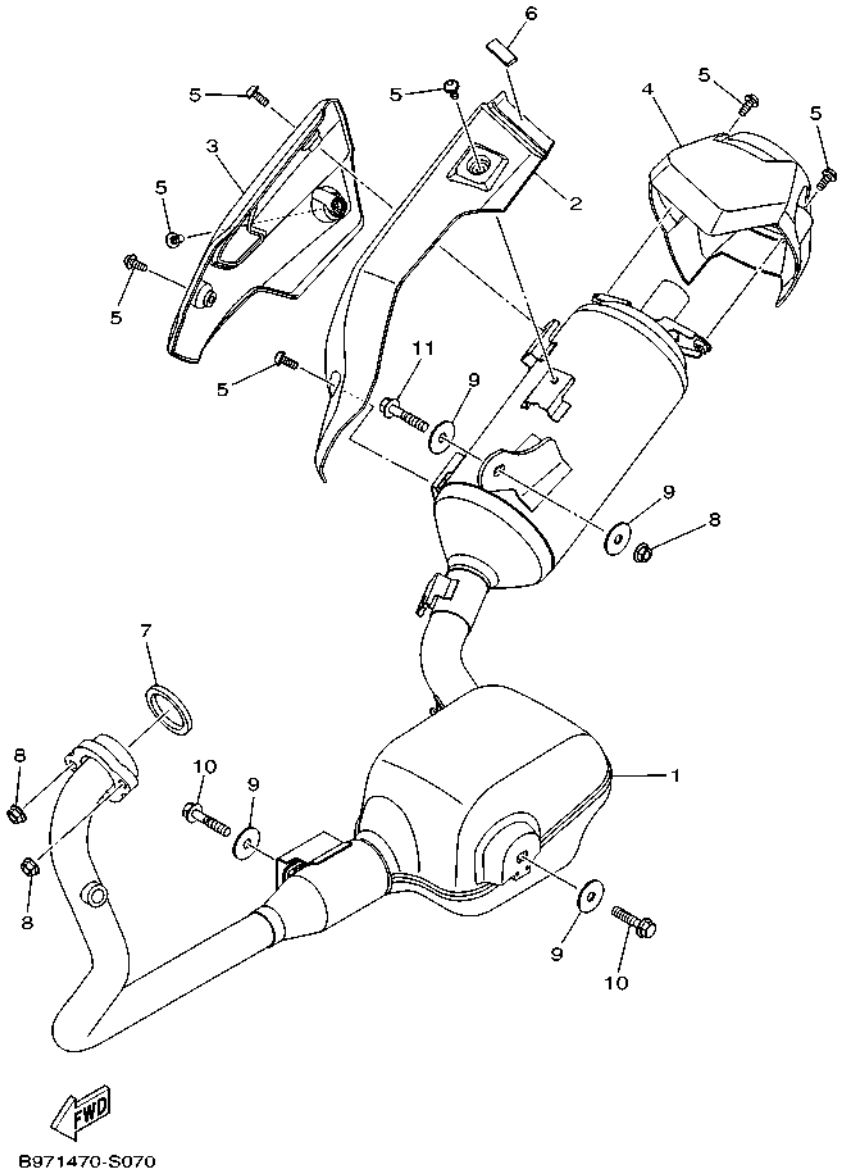

FIG. 7 DESCARGA EXHAUST

REF. Nº	CODIGO Nº PART NO.	DESCRIPCION DESCRIPTION	B8V1					OBSERVACIONES REMARKS
1	B97–E4703–01	SILENCIADOR COMPL. 1 MUFFLER COMP. 1	1					
2	B97–E4718–00	PROTECTOR DE SILENCIADOR 1 PROTECTOR, MUFFLER 1	1					
3	B97–E4728–00	PROTECTOR DE SILENCIADOR PROTECTOR, MUFFLER 2	1					
4	B97–E4799–00	TAPA CAP	1					
5	90111–06807	TORNILLO BOLT,HEX. SOCKET BUTTON	7					
6	B97–E475P–00	ASIENTO SEAT	1					
7	B97–E4613–00	JUNTA, TUBO DE ESCAPE GASKET, EXHAUST PIPE	1					
8	95702–08500	TUERCA DE BRIDA NUT, FLANGE	3					
9	90201–08612	ARANDELA PLANA WASHER, PLATE	4					
10	95812–08035	TORNILLO DE REBORDE BOLT, FLANGE	2					
11	95812–08040	TORNILLO DE REBORDE BOLT, FLANGE	1					

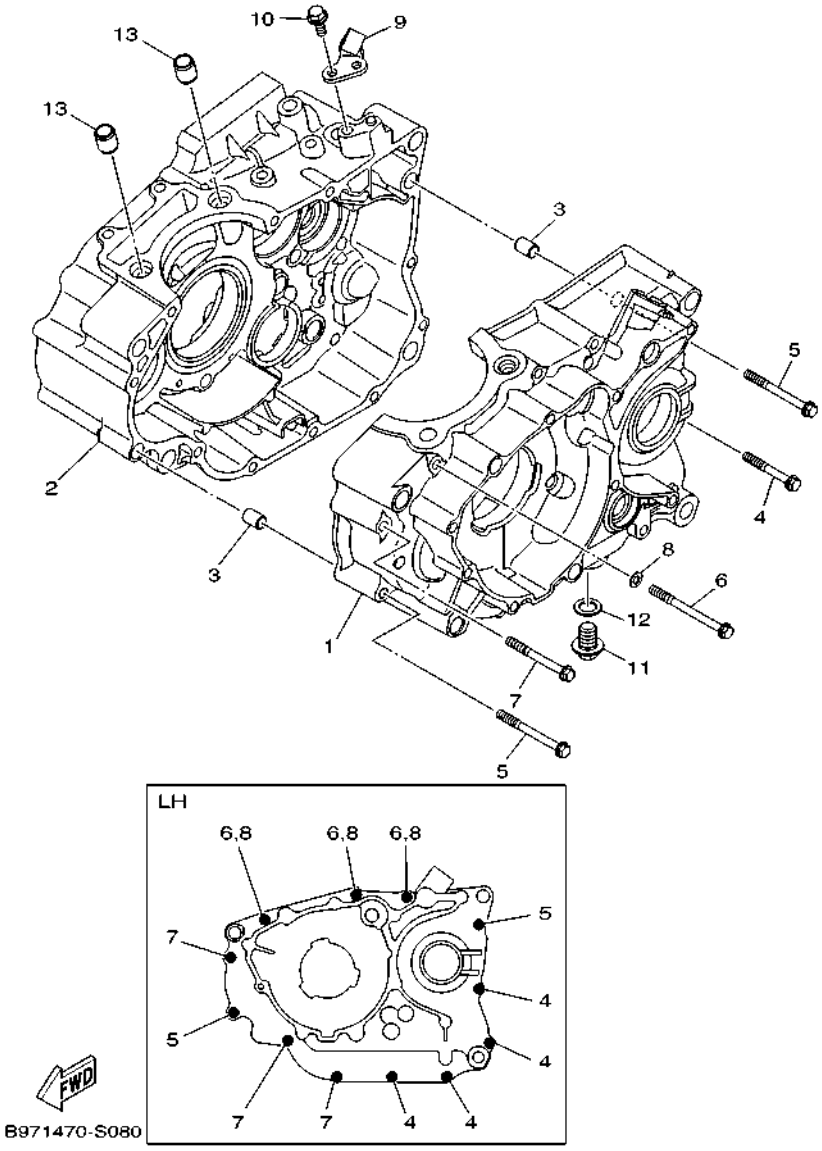

FIG. 8 CARTER — CRANKCASE

REF. Nº	CODIGO Nº PART NO.	DESCRIPCION DESCRIPTION	B8V1					OBSERVACIONES REMARKS
1	B97–E5111–00	CARTER MANIVELA 1 CRANKCASE 1	1					
2	B97–E5121–00	CARTER MANIVELA 2 CRANKCASE 2	1					
3	91810–14809	PASADOR DE CLAVIJA PIN, DOWEL	2					
4	95022–06045	PERNO, DE BRIDA BOLT, FLANGE	4					
5	95022–06060	PERNO, DE BRIDA BOLT, FLANGE	2					
6	95022–06070	PERNO, DE BRIDA BOLT, FLANGE	3					
7	95022–06055	PERNO, DE BRIDA BOLT, FLANGE	3					
8	90430–06817	JUNTA GASKET	3					
9	B97–E5441–00	SOSTEN DE CABLE DE EMBRAGUE HOLDER, CLUTCH CABLE	1					
10	95812–06016	TORNILLO DE REBORDE BOLT, FLANGE	1					
11	90340–12808	TORNILLO, DE DRENAJE PLUG, STRAIGHT SCREW	1					
12	90430–12213	JUNTA GASKET	1					
13	99530–14016	PASADOR, DE ESPIGA PIN, DOWEL	2					

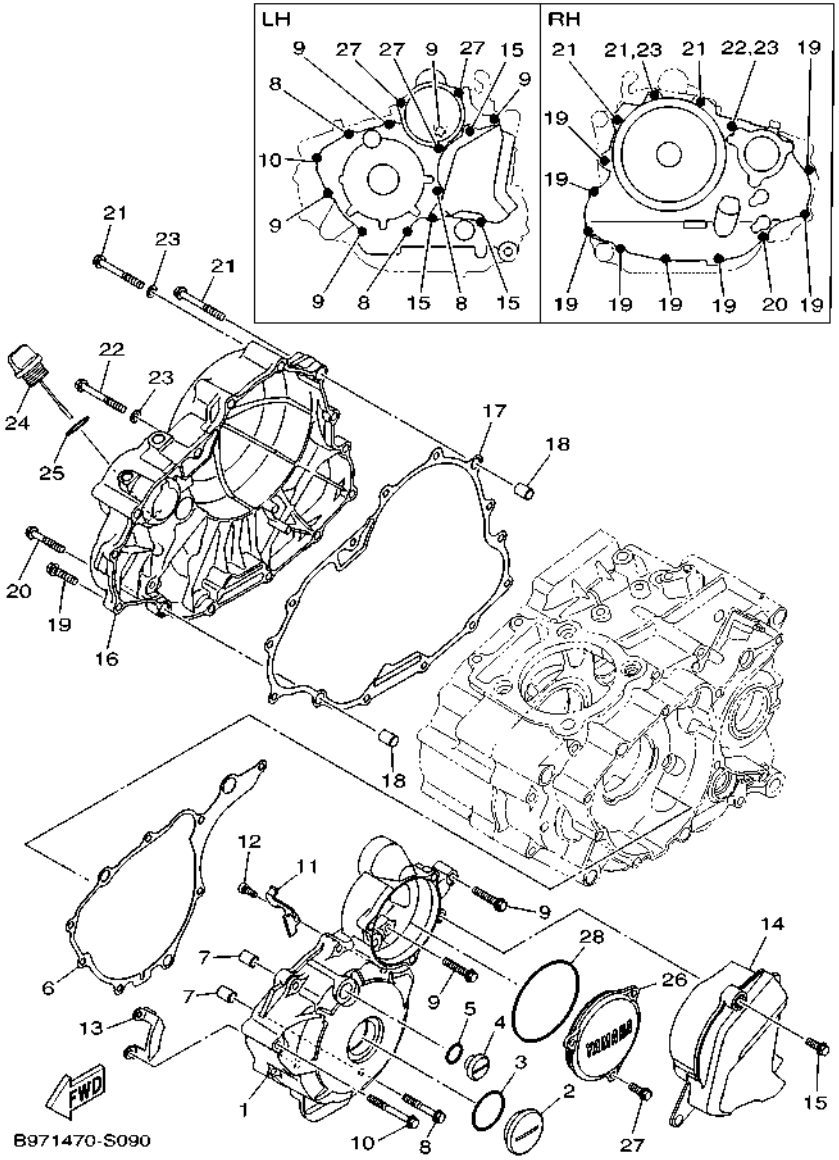

FIG. 9 CUBIERTA DE CARTER 1 — CRANKCASE COVER 1

REF. Nº	CODIGO Nº PART NO.	DESCRIPCION DESCRIPTION	B8V1					OBSERVACIONES REMARKS
1	B97–E5411–00	CUBIERTA DE CARTER 1 COVER, CRANKCASE 1	1					
2	90340–32805	TORNILLO, DE DRENAJE PLUG, STRAIGHT SCREW	1					
3	93210–328A4	ANILLO O O-RING	1					
4	90340–14117	TORNILLO, DE DRENAJE PLUG, STRAIGHT SCREW	1					
5	93210–14899	ANILLO O O-RING	1					
6	B97–E5451–00	EMPAQ DE CUBIERTA DE CARTER GASKET, CRANKCASE COVER 1	1					
7	91810–14809	PASADOR DE CLAVIJA PIN, DOWEL	2					
8	95022–06040	PERNO, DE BRIDA BOLT, FLANGE	3					
9	95022–06030	PERNO, DE BRIDA BOLT, FLANGE	5					
10	95022–06050	PERNO, DE BRIDA BOLT, FLANGE	1					
11	90465–20801	BRIDA CLAMP	1					
12	91312–05012	TORNILLO ALLEN BOLT, HEXAGON SOCKET HEAD	1					
13	B97–E5113–00	PLACA PLATE	1					
14	B97–E5418–00	CUBIERTA CAJA DE CADENA COVER, CHAIN CASE	1					
15	95022–06016	PERNO, DE BRIDA BOLT, FLANGE	3					
16	B97–E5421–00	TAPA DE CARTER DERECHA COVER, CRANKCASE 2	1					
17	B97–E5461–00	JUNTA TAPA CARTER DERECHO 2 GASKET, CRANKCASE COVER 2	1					
18	91810–14809	PASADOR DE CLAVIJA PIN, DOWEL	2					
19	95022–06025	PERNO, DE BRIDA BOLT, FLANGE	8					
20	95022–06035	PERNO, DE BRIDA BOLT, FLANGE	1					
21	95022–06050	PERNO, DE BRIDA BOLT, FLANGE	3					
22	95022–06050	PERNO, DE BRIDA BOLT, FLANGE	1					
23	90430–06817	JUNTA GASKET	2					
24	B97–E5362–00	TAPON DEL NIVEL DE ACEITE PLUG, OIL LEVEL	1					
25	93210–19809	ANILLO O O-RING	1					
26	B97–E5415–00	CUBIERTA, 1 COVER, 1	1					
27	95022–06016	PERNO, DE BRIDA BOLT, FLANGE	3					

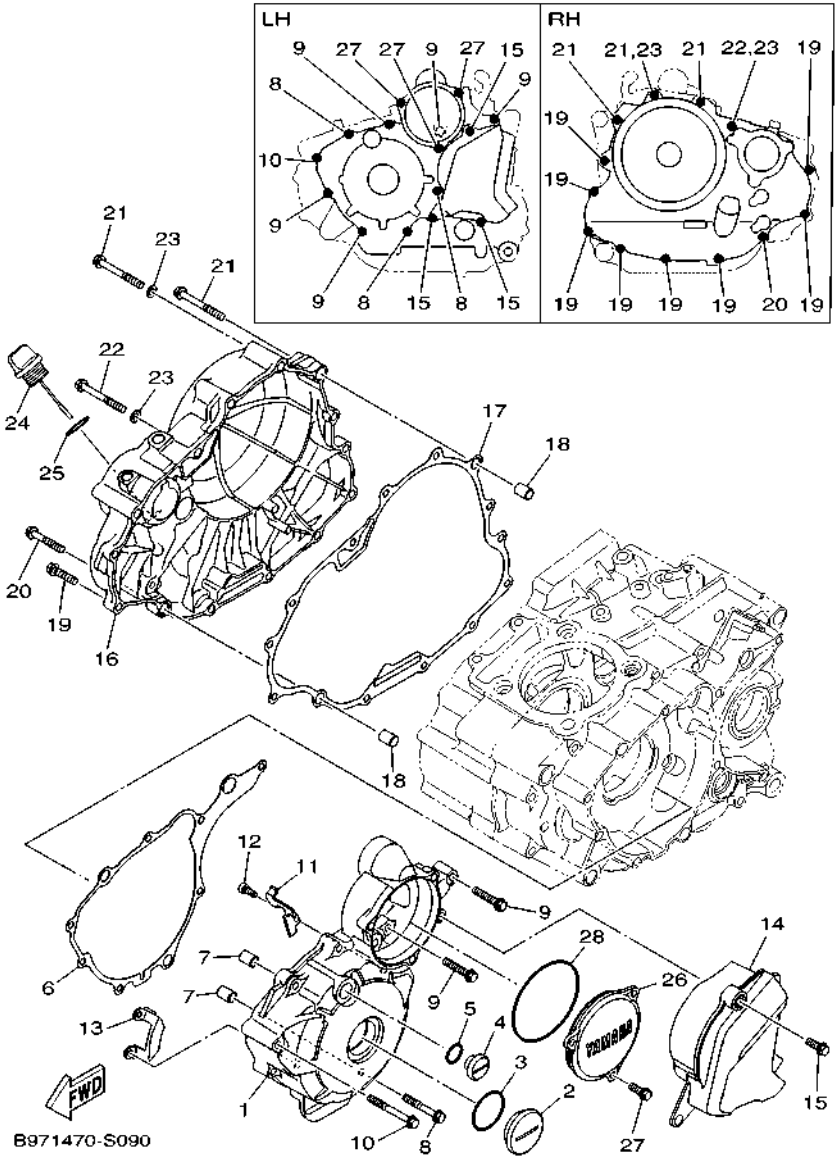

FIG. 9 CUBIERTA DE CARTER 1 — CRANKCASE COVER 1

REF. Nº	CODIGO Nº PART NO.	DESCRIPCION DESCRIPTION	B8V1					OBSERVACIONES REMARKS
28	93210–74801	ANILLO O O-RING	1					

FIG. 10 EMBRAGUE DEL ARRANQUE STARTER CLUTCH

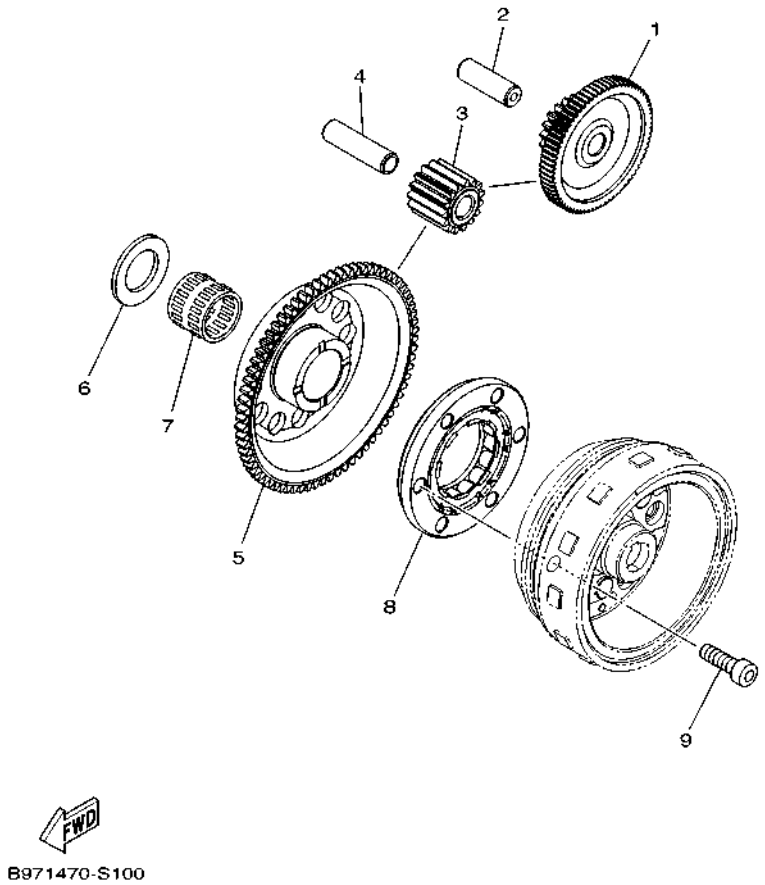

REF. Nº	CODIGO Nº PART NO.	DESCRIPCION DESCRIPTION	B8V1					OBSERVACIONES REMARKS
1	B97–E5512–00	ENGRENAJE NEUTRO (72D/18D) GEAR, IDLER 1 (72T/18T)	1					
2	B97–E5521–00	EJE 1 SHAFT 1	1					
3	B97–E5517–00	ENGRENAJE NEUTRO (15D/15D) GEAR, IDLER 2 (15T/15T)	1					
4	B97–E5522–00	EJE 2 SHAFT 2	1					
5	B97–E5515–00	ENGRANAJE 3 (72D) GEAR 3 (72T)	1					
6	90201–25291	ARANDELA PLANA WASHER, PLATE	1					
7	93310–225YE	COJINETE DE RODILLOS BEARING	1					
8	B97–E5590–00	ENSAMBLE GUIA CADENA ARRANQUE STARTER ONE-WAY ASSY	1					
9	90110–08067	TORNILLO ALLEN BOLT, HEXAGON SOCKET HEAD	3					

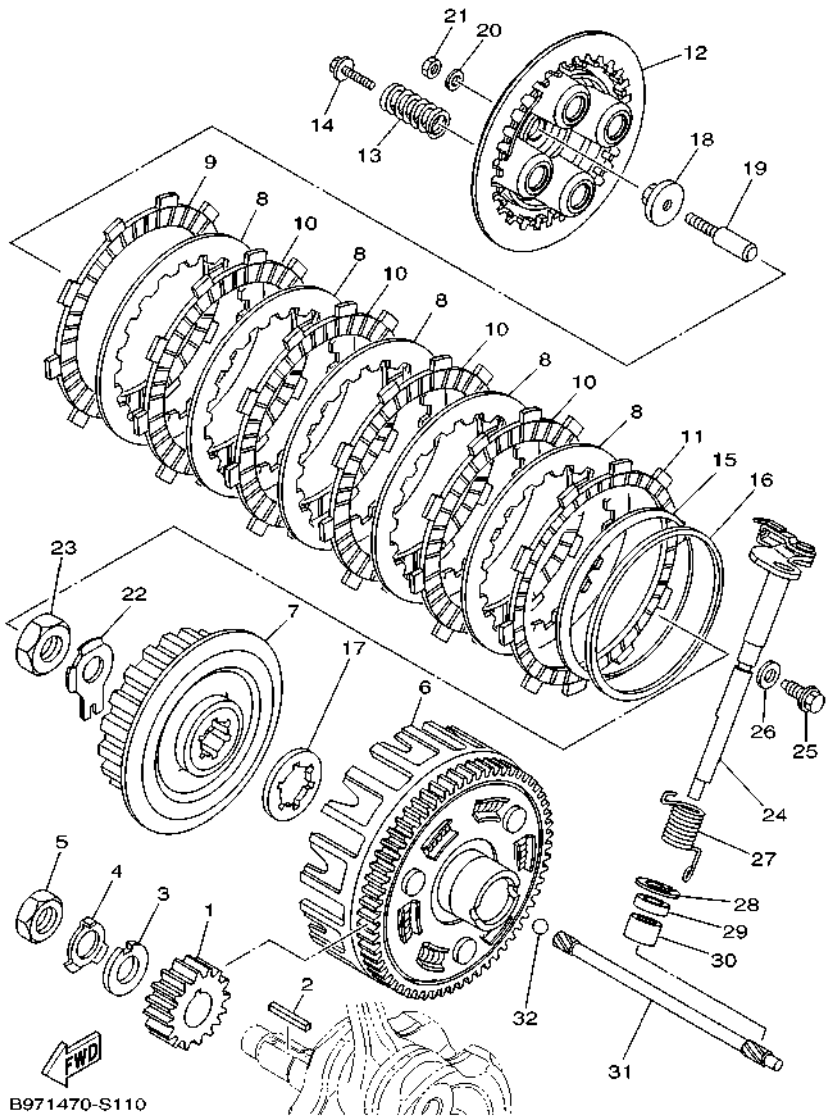

FIG. 11 EMBRAGUE CLUTCH

REF. Nº	CODIGO Nº PART NO.	DESCRIPCION DESCRIPTION	B8V1					OBSERVACIONES REMARKS
1	B97–E6111–00	ENGRANAJE TRACC.PRIMARIA GEAR, PRIMARY DRIVE	1					
2	90282–05077	CHAVETA, RECTA KEY, STRAIGHT	1					
3	90214–16063	ARANDELA DE POSICION WASHER, CLAW	1					
4	90215–16293	ARANDELA DE CIERRE WASHER, LOCK	1					
5	90170–16800	TUERCA NUT	1					
6	B97–E6150–00	CAMPANA DE EMBRAGUE PRIMARY DRIVEN GEAR COMP.	1					
7	B97–E6371–00	CUBO, DE EMBRAGUE BOSS, CLUTCH	1					
8	B97–E6324–00	PLACA DE EMBRAGUE PLATE, CLUTCH 1	5					
9	B97–E6321–00	PLACA DE FRICCION PLATE, FRICTION	1					
10	21C–E6331–00	DISCO, DE FRICCION 2 PLATE, FRICTION 2	4					
11	B97–E6307–00	PLACA DE FRICCION 3 PLATE, FRICTION 3	1					
12	B97–E6351–00	PLATO DE PRESION PLATE, PRESSURE 1	1					
13	B97–E6333–00	RESORTE DE EMBRAGUE 1 SPRING, CLUTCH 1	4					
14	B97–E6337–00	TORNILLO DE RESORTE SCREW, SPRING	4					
15	1S4–E6383–00	RESORTE.,COJIN SPRING.,CUSHION	1					
16	B97–E6384–00	PLACA DE ASIENTO PLATE, SEAT	1					
17	B97–E6154–00	ARANDELA, DE EMPUJE 1 PLATE, THRUST 1	1					
18	21C–E6358–00	PLACA DE EMPUJE PLATE, PUSH	1					
19	B97–E6356–10	VARILLA DE EMPUJE 1 ROD, PUSH 1	1					
20	54B–E6144–00	ARANDELA WASHER	1					
21	3C1–E6344–00	TUERCA DE AJUSTE NUT, ADJUSTING	1					
22	90215–16800	ARANDELA DE CIERRE WASHER, LOCK	1					
23	90170–16801	TUERCA NUT	1					
24	B97–E6380–00	LEVA DE EMPUJE COMPLETA PUSH LEVER ASSY	1					
25	90105–08889	TORNILLO BOLT, FLANGE	1					
26	90430–08803	JUNTA GASKET	1					
27	B97–E6345–00	RESORTE DE RETORNO SPRING, RETURN	1					

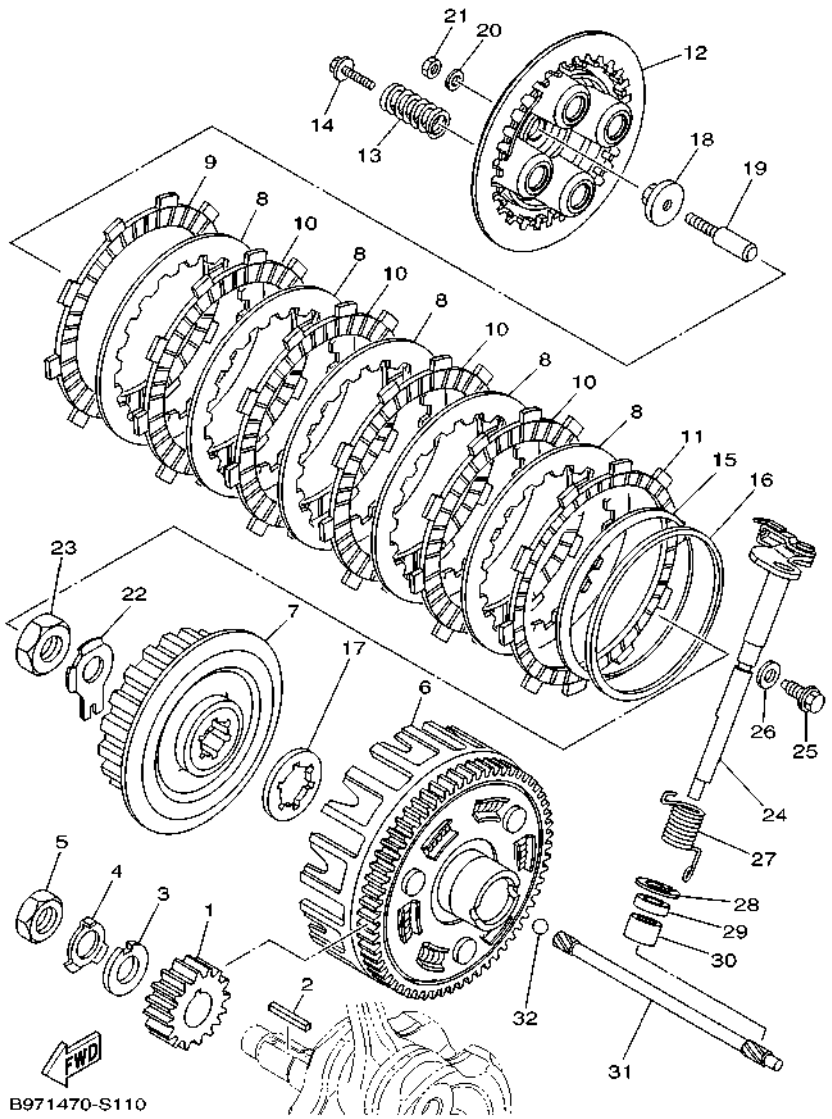

FIG. 11 EMBRAGUE — CLUTCH

REF. Nº	CODIGO Nº PART NO.	DESCRIPCION DESCRIPTION	B8V1					OBSERVACIONES REMARKS
28	99009–20500	PRESILLA REDONDA CIRCLIP	1					
29	93102–12877	SELLO ACEITE OIL SEAL	1					
30	93315–112Y9	COJINETE DE RODILLOS BEARING	1					
31	B97–E6357–00	VARILLA DE EMPUJE 2 ROD, PUSH 2	1					
32	93511–32842	ESFERA BALL	1					

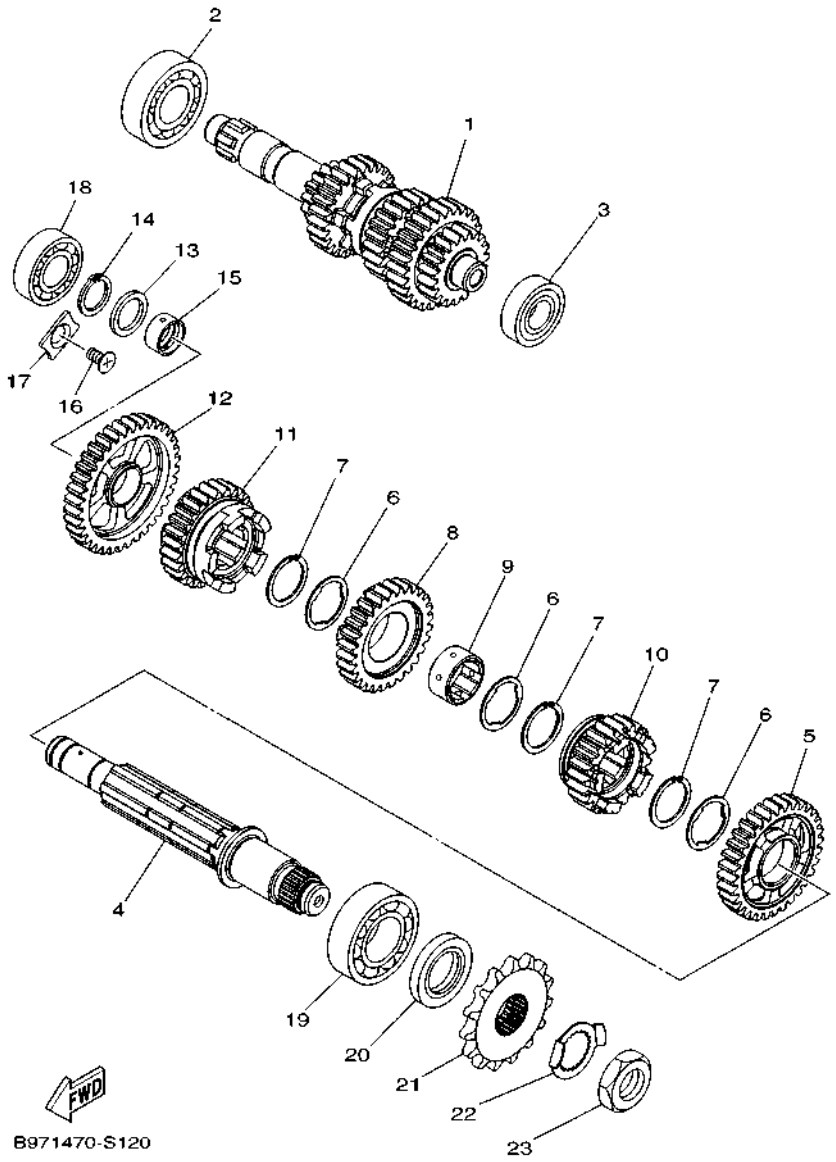

FIG. 12 TRANSMISION — TRANSMISSION

REF. Nº	CODIGO Nº PART NO.	DESCRIPCION DESCRIPTION	B8V1					OBSERVACIONES REMARKS
1	B97–E7410–00	EJE PRINCIPAL COMPLETO MAIN AXLE COMP.	1					
2	93306–272X4	COJINETE BEARING	1					
3	93306–003YN	COJINETE BEARING	1					
4	B97–E7402–00	EJE DE TRACCION COMPLETO DRIVE AXLE ASSY	1					
5	B97–E7221–00	ENGRANAJE RUEDA DE 2DA (32T) GEAR, 2ND WHEEL (32T)	1					
6	90209–22191	ARANDELA DE SEPARACION WASHER	3					
7	93440–25084	SEGURO CIRCLIP	3					
8	B97–E7231–00	ENGRANAJE RUEDA DE 3RA (28T) GEAR, 3RD WHEEL (28T)	1					
9	90387–22027	ESPACIADOR COLLAR	1					
10	B97–E7251–00	ENGRANAJE RUEDA DE 5TA (23T) GEAR, 5TH WHEEL (23T)	1					
11	B97–E7241–00	ENGRANAJE DE RUEDA 4TA (26T) GEAR, 4TH WHEEL (26T)	1					
12	B97–E7211–00	ENGRANAJE RUEDA DE 1RA (36T) GEAR, 1ST WHEEL (36T)	1					
13	90201–178D3	ARANDELA PLANA WASHER, PLATE	1					
14	93410–17037	SEGURO CIRCLIP	1					
15	21C–E7258–00	COLLAR 1 COLLAR 1	1					
16	98702–06012	TORNILLO CON CABEZA PLANA SCREW, FLAT HEAD	1					
17	B97–E7558–00	PLACA PLATE, BEARING	1					
18	93306–203XR	COJINETE BEARING	1					
19	93306–205X3	COJINETE BEARING	1					
20	93102–25827	SELLO ACEITE OIL SEAL	1					
21	9382R–15832	CORONA (15T) SPROCKET, DRIVE (15T)	1					
22	90215–23265	ARANDELA DE CIERRE WASHER, LOCK	1					
23	90179–18801	TUERCA NUT	1					

FIG. 13 LEVA DE CAMBIO & HORQUILLA — SHIFT CAM & FORK

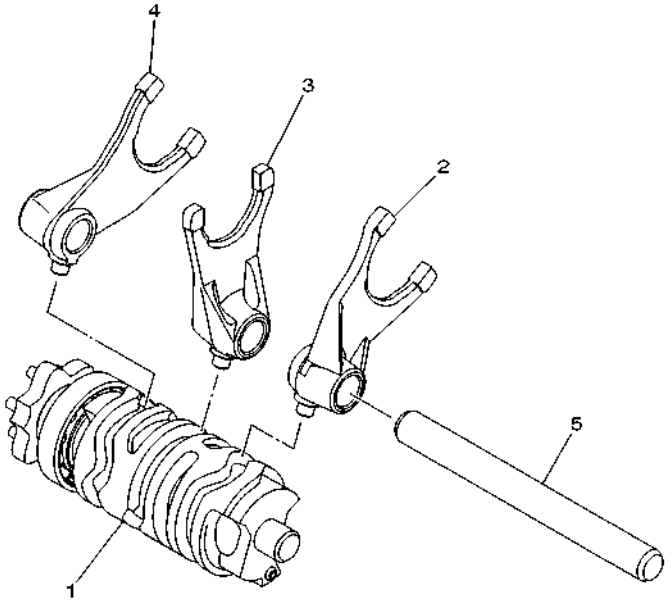

B971470-S130

REF. Nº	CODIGO Nº PART NO.	DESCRIPCION DESCRIPTION	B8V1					OBSERVACIONES REMARKS
1	B97–E8540–01	LEVA DEL CAMBIO COMPLETA SHIFT CAM ASSY	1					
2	B97–E8511–00	HORQUILLA DEL CAMBIO 1 FORK, SHIFT 1	1					
3	B97–E8512–00	HORQUILLA DEL CAMBIO 2 FORK, SHIFT 2	1					
4	B97–E8513–00	HORQUILLA DEL CAMBIO 3 FORK, SHIFT 3	1					
5	B97–E8531–00	BARRA GUIA HORQ. CAMBIO 1 BAR, SHIFT FORK GUIDE 1	1					

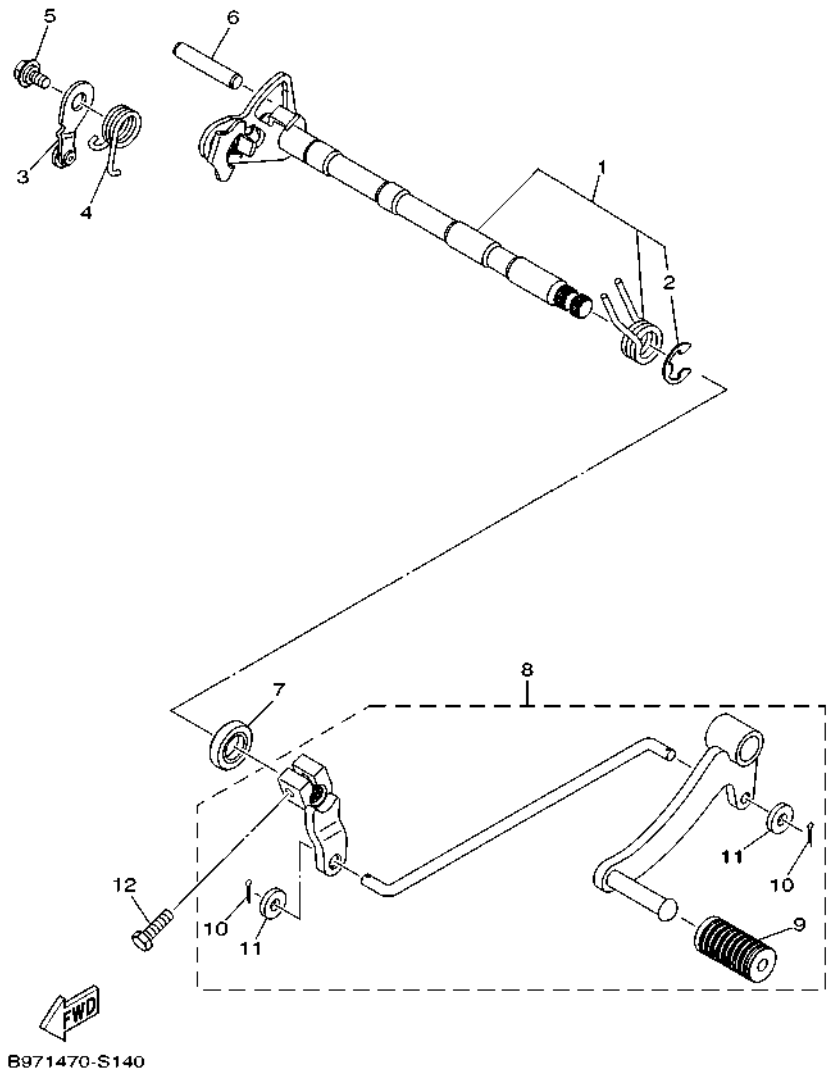

FIG. 14 EJE DE CAMBIO & PEDAL — SHIFT SHAFT

REF. Nº	CODIGO Nº PART NO.	DESCRIPCION DESCRIPTION	B8V1					OBSERVACIONES REMARKS
1	B97–E8101–00	EJE SELECTOR COMPLETO SHIFT SHAFT ASSY	1					
2	93430–12812	.SEGURO .CIRCLIP	1					
3	B97–E8140–00	PALANCA DE TOPE COMPLETA STOPPER LEVER ASSY	1					
4	B97–E8144–00	GANCHO DE RESORTE HANGER, SPRING	1					
5	90109–06190	PERNO BOLT	1					
6	93608–43228	PASADOR DE CLAVIJA PIN, DOWEL	1					
7	93102–14856	SELLO ACEITE OIL SEAL	1					
8	B8V–E8110–00	PEDAL DE CAMBIO COMPLETO SHIFT PEDAL ASSY	1					
9	5VA–E8113–00	.FUNDA DEL PEDAL DEL CAMBIO .COVER, SHIFT PEDAL	1					
10	90252–18800	.PASADOR DE CHAVETA .PIN, COTTER	2					
11	90201–06871	.ARANDELA PLANA .WASHER, PLATE	2					
12	97012–06020	PERNO BOLT	1					

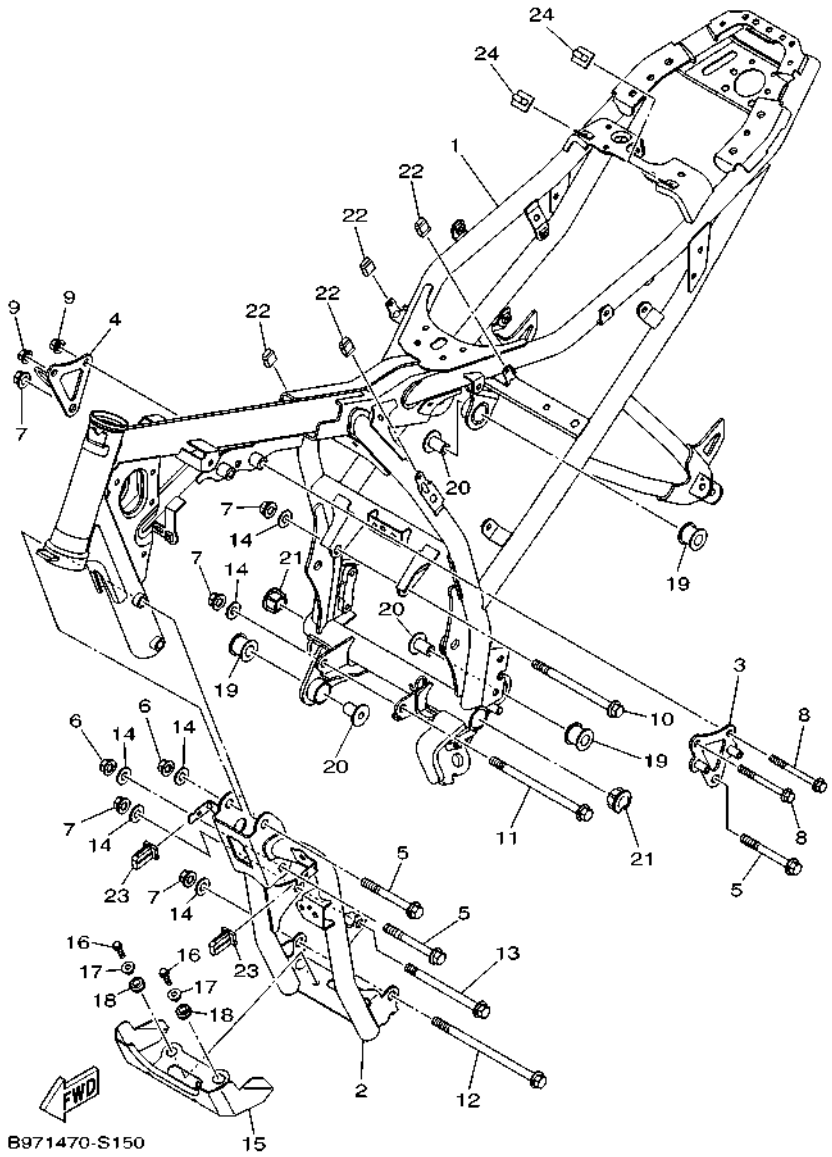

FIG. 15 CUADRO — FRAME

REF. Nº	CODIGO Nº PART NO.	DESCRIPCION DESCRIPTION	B8V1					OBSERVACIONES REMARKS
1	B8V–F1110–01	ARMAZON COMPLETO FRAME COMP.	1					
2	B97–F1150–00	CONJ. TUBO INFERIOR 2 DOWN TUBE COMP. 2	1					
3	B97–F1317–00	SOPORTE DE MOTOR 3 STAY, ENGINE 3	1					
4	B97–F1318–00	SOPORTE DE MOTOR 4 STAY, ENGINE 4	1					
5	95812–10085	TORNILLO DE REBORDE BOLT, FLANGE	3					
6	90179–10811	TUERCA NUT	2					
7	90179–10819	TUERCA NUT	5					
8	95812–08080	TORNILLO DE REBORDE BOLT, FLANGE	2					
9	90179–08674	TUERCA NUT	2					
10	90105–10110	TORNILLO BOLT, FLANGE	1					
11	90105–10114	TORNILLO BOLT, FLANGE	1					
12	90105–10118	TORNILLO BOLT, FLANGE	1					
13	90105–10111	TORNILLO BOLT, FLANGE	1					
14	90201–10829	ARANDELA PLANA WASHER, PLATE	6					
15	B97–F117A–00	SOPORTE STAY	1					
16	95022–06020	PERNO, DE BRIDA BOLT, FLANGE	2					
17	90560–06201	SEPARADOR SPACER	2					
18	90480–13163	TAPON GROMMET	2					
19	20P–E4747–00	AMORTIGUADOR DE SILENCIADOR DAMPER, MUFFLER	3					
20	90387–08822	ESPACIADOR COLLAR	3					
21	2GS–F1279–00	TAPON CIEGO PLUG, BLIND	2					
22	2LP–F411J–00	AMORTIGUADOR, DE CUBIERTA LAT DAMPER, SIDE COVER	4					
23	45S–F1778–00	AMORTIGUADOR DE MONTAJE DAMPER, LOCATING 1	2					
24	B97–F411J–00	AMORTIGUADOR, DE CUBIERTA LAT DAMPER, SIDE COVER	2					

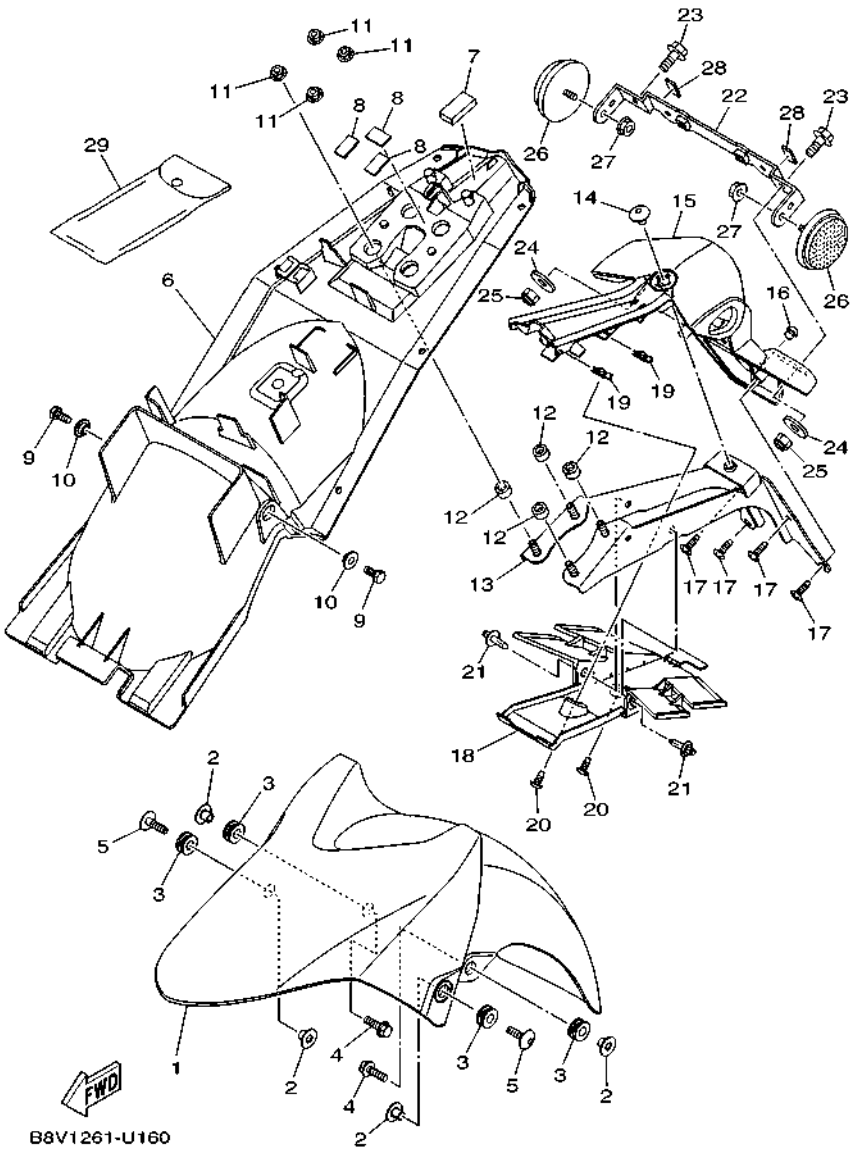

FIG. 16 GUARDABARRO FENDER

REF. Nº	CODIGO Nº PART NO.	DESCRIPCION DESCRIPTION	B8V1					OBSERVACIONES REMARKS
1	45D–F1511–10–P0	GUARDABARRO DELANTERO FENDER, FRONT	1					CM6 PARA SMX CM6 FOR SMX
	45D–F1511–10–P5	GUARDABARRO DELANTERO FENDER, FRONT	1					SMX PARA MBL2 SMX FOR MBL2
	45D–F1511–10–P7	GUARDABARRO DELANTERO FENDER, FRONT	1					MNM3 PARA MDPBM1 MNM3 FOR MDPBM1
2	90387–068C5	ESPACIADOR COLLAR	4					
3	90480–08801	TAPON GROMMET	4					
4	95802–06020	TORNILLO DE REBORDE BOLT, FLANGE	2					
5	90111–06117	TORNILLO BOLT,HEX. SOCKET BUTTON	2					
6	B97–F1611–01	GUARDABARRO TRASERO FENDER, REAR	1					
7	90520–07806	EQUILIBRIO, CUBIERTA DAMPER, PLATE	1					
8	20P–F8371–00	AMORTIGUADOR DAMPER	3					
9	97012–06014	PERNO BOLT	2					
10	90387–06048	ESPACIADOR COLLAR	2					
11	95602–06200	TUERCA DE AUTO-CIERRE NUT, SELF-LOCKING	4					
12	90387–068H8	ESPACIADOR COLLAR	4					
13	B97–F1640–00	SOPORTE TRASERO COMPLETO REAR STAY COMP.	1					
14	90111–06859	TORNILLO BOLT,HEX. SOCKET BUTTON	1					
15	B97–F1629–00	GUARDABARRO INFERIOR GUARD, MUD	1					
16	21C–F1717–00	AMORTIGUADOR DAMPER	1					
17	97702–50016	TORNILLO ROSCA HEMBRA SCREW, TAPPING	4					
18	B97–F163A–00	CUBIERTA TRAS GUARDABARRO 1 COVER, REAR FENDER 1	1					
19	90183–05807	TUERCA DE RESORTE NUT, SPRING	2					
20	97707–50012	TORNILLO SCREW, TRUSS HEAD TAPPING	2					
21	90269–06813	REMACHE RIVET	2					
22	B8H–F1685–00	SOPORTE DE LICENCIA BRACKET, LICENSE	1					
23	95802–06016	TORNILLO DE REBORDE BOLT, FLANGE	2					
24	90201–06078	ARANDELA PLANA WASHER, PLATE	2					
25	95607–06100	TUERCA AUTOBLOCANTE NUT, SELF-LOCKING	2					

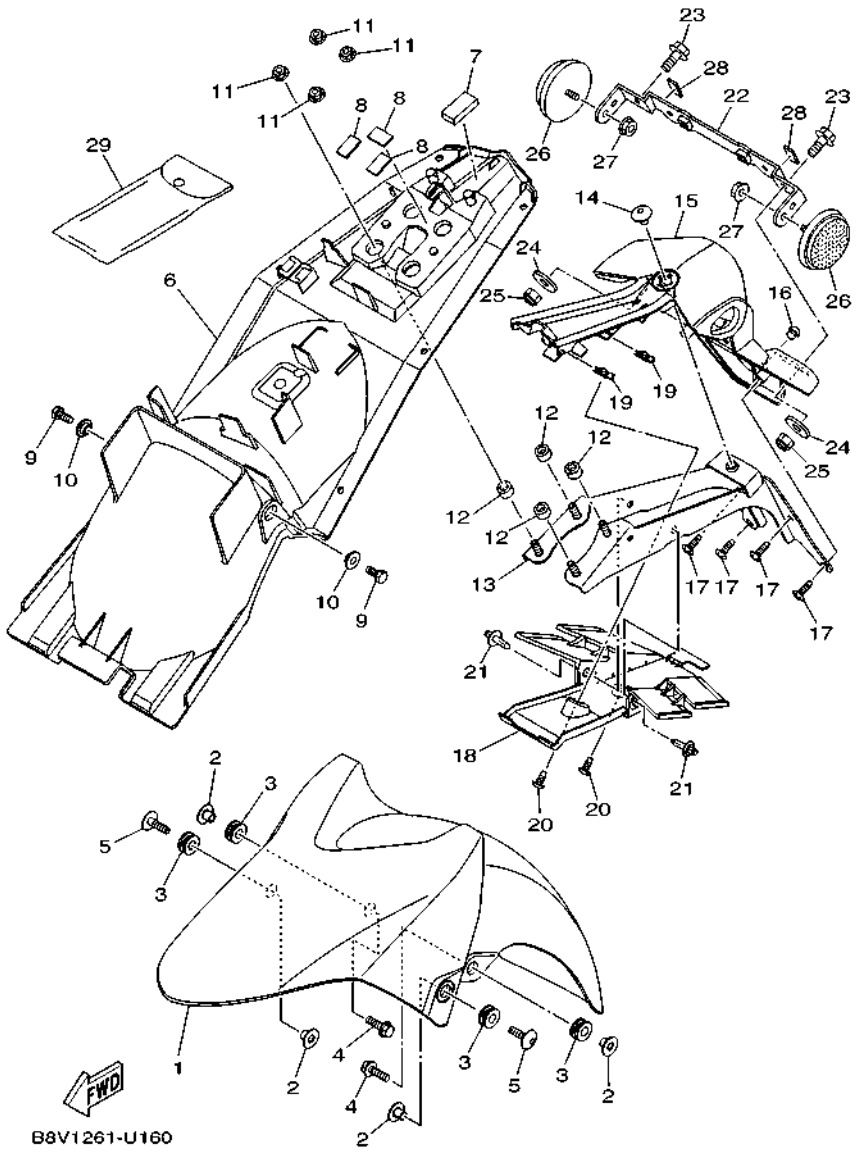

FIG. 16 GUARDABARRO FENDER

REF. Nº	CODIGO Nº PART NO.	DESCRIPCION DESCRIPTION	B8V1					OBSERVACIONES REMARKS
26	2FC–H5111–00	REFLECTOR DELANTERA 1 REFLECTOR, 1	2					
27	95707–05500	TUERCA DE BRIDA NUT, FLANGE	2					
28	90520–02810	EQUILIBRIO, CUBIERTA DAMPER, PLATE	2					
29	B97–F8100–00	JUEGO DE HERRAMIENTAS TOOL KIT	1					

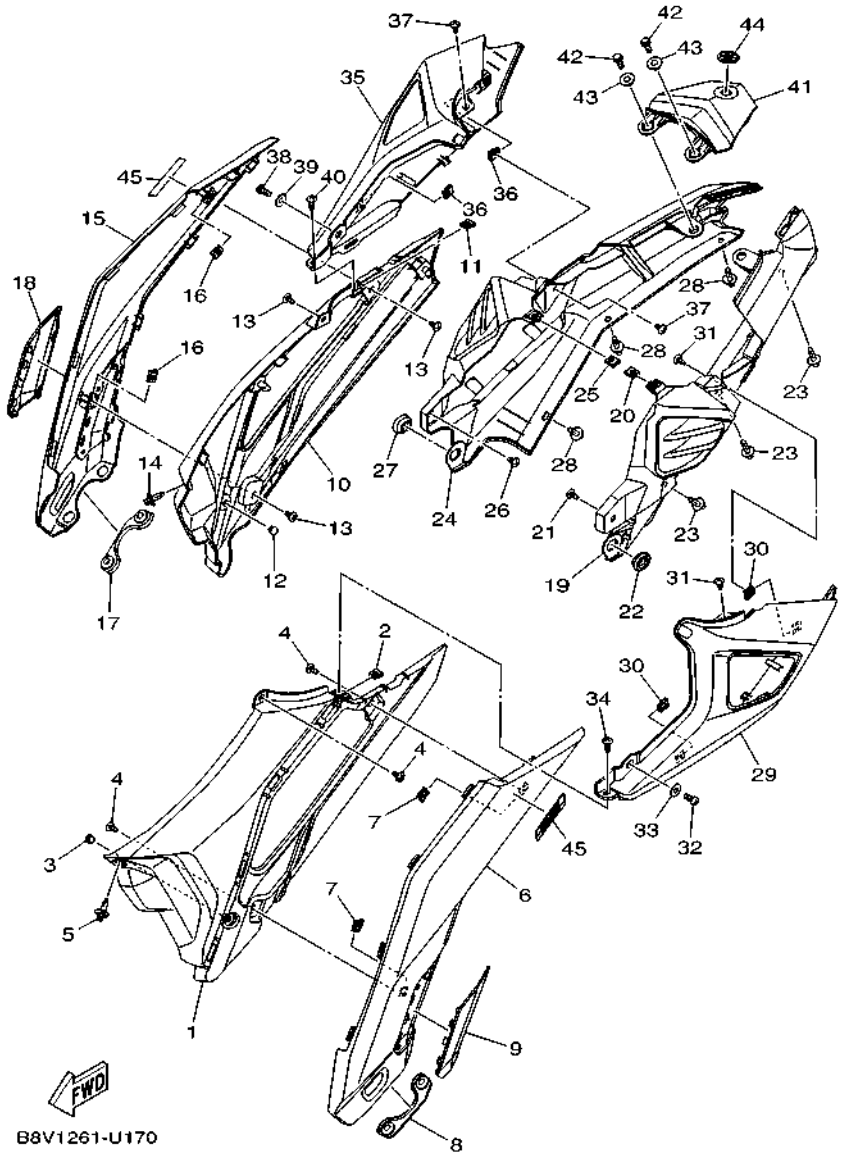

FIG. 17 CUBIERTA LATERAL — SIDE COVER

REF. Nº	CODIGO Nº PART NO.	DESCRIPCION DESCRIPTION	B8V1					OBSERVACIONES REMARKS
1	B97–F1711–00	CUBIERTA LATERAL 1 COVER, SIDE 1	1					
2	90183–05807	TUERCA DE RESORTE NUT, SPRING	1					
3	21C–F1717–00	AMORTIGUADOR DAMPER	1					
4	97702–50012	TORNILLO ROSCA HEMBRA SCREW, TAPPING	3					
5	90269–06813	REMACHE RIVET	1					
6	B8V–F172A–00–P0	PANEL 1 PANEL 1	1					MBL2 PARA SMX,MDPBM1 MBL2 FOR SMX,MDPBM1
	B8V–F172A–00–P1	PANEL 1 PANEL 1	1					SMX PARA MBL2 SMX FOR MBL2
7	90183–05807	TUERCA DE RESORTE NUT, SPRING	2					
8	B97–F174X–00	AMORTIGUADOR DAMPER	1					
9	B97–F171L–00	MUELLE , CUBIERTA LATERAL 1 MOLE, SIDE COVER 1	1					
10	B97–F1721–00	CUBIERTA LATERAL 2 COVER, SIDE 2	1					
11	90183–05807	TUERCA DE RESORTE NUT, SPRING	1					
12	21C–F1717–00	AMORTIGUADOR DAMPER	1					
13	97702–50012	TORNILLO ROSCA HEMBRA SCREW, TAPPING	3					
14	90269–06813	REMACHE RIVET	1					
15	B8V–F172F–00–P0	PANEL 2 PANEL 2	1					MBL2 PARA SMX,MDPBM1 MBL2 FOR SMX,MDPBM1
	B8V–F172F–00–P1	PANEL 2 PANEL 2	1					SMX PARA MBL2 SMX FOR MBL2
16	90183–05807	TUERCA DE RESORTE NUT, SPRING	2					
17	B97–F174Y–00	AMORTIGUADOR DAMPER	1					
18	B97–F171M–00	MUELLE, CUBIERTA LATERAL 2 MOLE, SIDE COVER 2	1					
19	B97–F1731–00	TAPA LATERAL 3 COVER, SIDE 3	1					
20	90183–05807	TUERCA DE RESORTE NUT, SPRING	1					
21	97702–50012	TORNILLO ROSCA HEMBRA SCREW, TAPPING	1					
22	90480–01558	TAPON GROMMET	1					
23	90269–06813	REMACHE RIVET	3					
24	B97–F1741–00	TAPA LATERAL 4 COVER, SIDE 4	1					
25	90183–05807	TUERCA DE RESORTE NUT, SPRING	1					

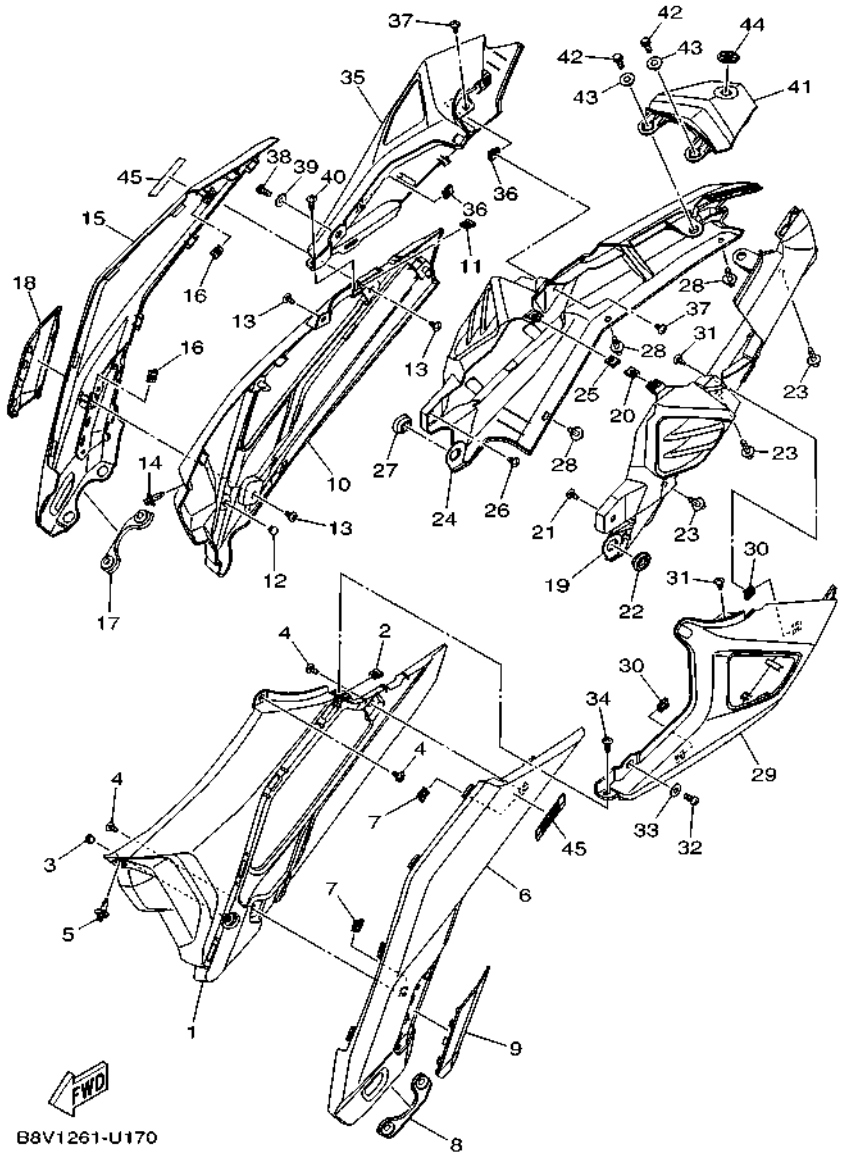

FIG. 17 CUBIERTA LATERAL — SIDE COVER

REF. Nº	CODIGO Nº PART NO.	DESCRIPCION DESCRIPTION	B8V1					OBSERVACIONES REMARKS
26	97702–50012	TORNILLO ROSCA HEMBRA SCREW, TAPPING	1					
27	90480–01558	TAPON GROMMET	1					
28	90269–06813	REMACHE RIVET	3					
29	B8V–F171E–00–P0	CUBIERTA LATERAL 5 COVER, SIDE 5	1					UR CM6 PARA SMX UR CM6 FOR SMX
	B8V–F171E–00–P1	CUBIERTA LATERAL 5 COVER, SIDE 5	1					UR PARA MBL2 UR FOR MBL2
	B8V–F171E–00–P2	CUBIERTA LATERAL 5 COVER, SIDE 5	1					UR PARA MDPBM1 UR FOR MDPBM1
30	90183–05807	TUERCA DE RESORTE NUT, SPRING	2					
31	97702–50012	TORNILLO ROSCA HEMBRA SCREW, TAPPING	2					
32	98502–06014	TORNILLO SCREW, PAN HEAD	1					
33	90201–061A5	ARANDELA PLANA WASHER, PLATE	1					
34	97707–50016	TORNILLO SCREW, TRUSS HEAD TAPPING	1					
35	B8V–F171X–00–P0	CUBIERTA LATERAL 6 COVER, SIDE 6	1					UR CM6 PARA SMX UR CM6 FOR SMX
	B8V–F171X–00–P1	CUBIERTA LATERAL 6 COVER, SIDE 6	1					UR PARA MBL2 UR FOR MBL2
	B8V–F171X–00–P2	CUBIERTA LATERAL 6 COVER, SIDE 6	1					UR PARA MDPBM1 UR FOR MDPBM1
36	90183–05807	TUERCA DE RESORTE NUT, SPRING	2					
37	97702–50012	TORNILLO ROSCA HEMBRA SCREW, TAPPING	2					
38	98502–06014	TORNILLO SCREW, PAN HEAD	1					
39	90201–061A5	ARANDELA PLANA WASHER, PLATE	1					
40	97707–50016	TORNILLO SCREW, TRUSS HEAD TAPPING	1					
41	B97–F172X–00	CUBIERTA DE LUZ DE COLA COVER, TAILLIGHT	1					
42	95022–06016	PERNO, DE BRIDA BOLT, FLANGE	2					
43	90387–068N2	ESPACIADOR COLLAR	2					
44	B8V–F836B–00	MARCA TUNING FORK MARK	1					
45	B72–F4549–00	EMBLEMA DE GRIFO DE DEBOSITO EMBLEM	2					

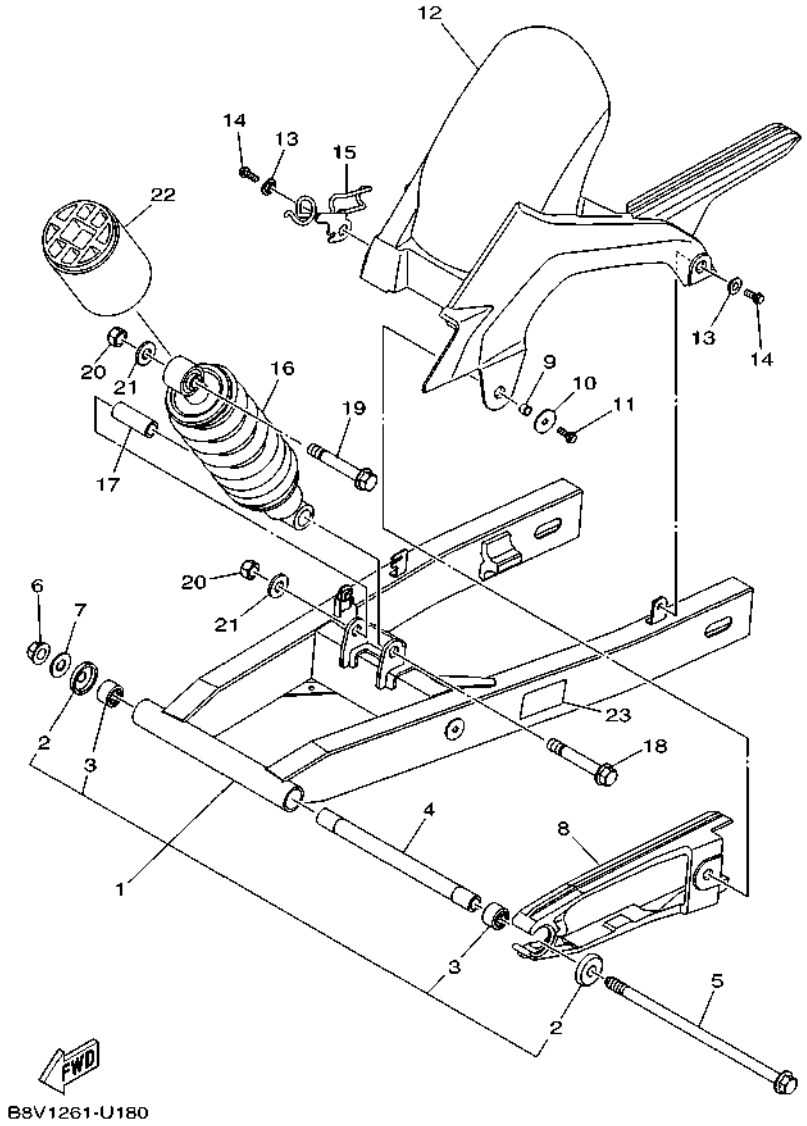

FIG. 18 BRAZO TRASERO & SUSPENSION — REAR ARM & SUSPENSION

REF. Nº	CODIGO Nº PART NO.	DESCRIPCION DESCRIPTION	B8V1					OBSERVACIONES REMARKS
1	B8V–WF211–01	BRAZO TRASERO COMPLETO REAR ARM COMP.	1					
2	20P–F2129–00	.TAPA DE EMPUJE 2 .COVER, THRUST 2	2					
3	93317–318Y5	.COJINETE .BEARING	2					
4	90387–12863	ESPACIADOR COLLAR	1					
5	2GS–F2141–00	EJE DEL BARCULANTE SHAFT, PIVOT	1					
6	95607–12200	TUERCA DE AUTO-CIERRE NUT, SELF-LOCKING	1					
7	90201–12028	ARANDELA PLANA WASHER, PLATE	1					
8	B97–F2151–00	SELLO DE GUARDA SEAL, GUARD	1					
9	90387–066J9	ESPACIADOR COLLAR	1					
10	90201–06086	ARANDELA PLANA WASHER, PLATE	1					
11	95022–06016	PERNO, DE BRIDA BOLT, FLANGE	1					
12	B97–F1650–00	GUARDABARRO TRANSERO COMP. REAR FENDER COMP.	1					
13	90387–068S1	ESPACIADOR COLLAR	2					
14	95022–06016	PERNO, DE BRIDA BOLT, FLANGE	2					
15	B97–F5887–00	SOPORTE DE MANGUERA FRENO HOLDER, BRAKE HOSE 3	1					
16	B97–F2210–00	AMORTIGUADOR TRASERO COMPLETO SHOCK ABSORBER ASSY, REAR	1					
17	90387–12845	ESPACIADOR COLLAR	1					
18	90105–12057	TORNILLO BOLT, FLANGE	1					
19	90105–12804	TORNILLO BOLT, FLANGE	1					
20	95612–12100	TUERCA U NUT, U	2					
21	90201–122H1	ARANDELA PLANA WASHER, PLATE	2					
22	B8V–F2263–00	FUNDA BOOT, REAR SHOCK ABSORBER	1					
23	B8V–F1668–00	ETIQUETA DE FRANJA LABEL, TIRE	1					

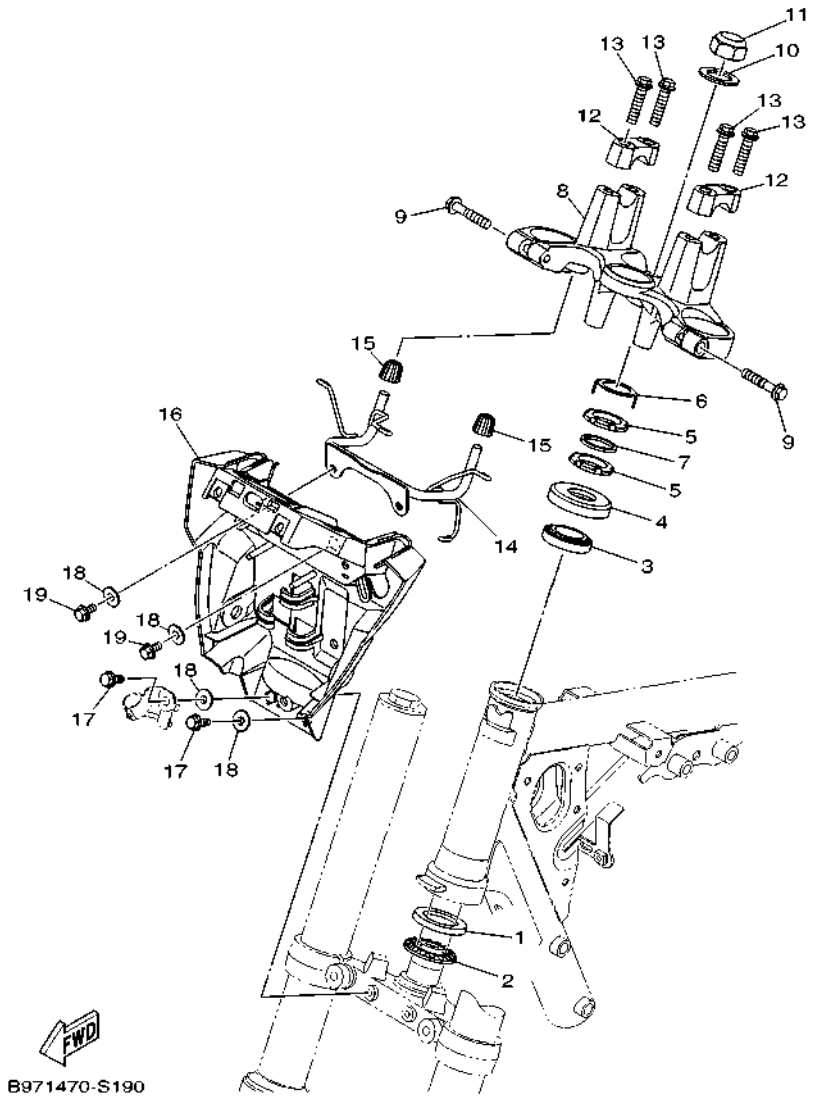

FIG. 19 DIRECCION — STEERING

REF. Nº	CODIGO Nº PART NO.	DESCRIPCION DESCRIPTION	B8V1					OBSERVACIONES REMARKS
1	21C–F3412–00	PISTA DE BOLAS 2 RACE, BALL 2	1					
2	4LS–F341E–10	RETEN DE COJINETE RETAINER, BALL BEARING	1					
3	93399–99949	COJINETE BEARING	1					
4	5YY–F3416–00	CUBIERTA DE BASE DE BOLA 2 COVER, BALL RACE 2	1					
5	90179–25615	TUERCA NUT	2					
6	20P–F3418–00	ARANDELA ESPECIAL WASHER, SPECIAL	1					
7	90202–26142	ARANDELA DE PLANA WASHER, PLATE	1					
8	B97–F3435–00	PLATINA SUPERIOR CROWN, HANDLE	1					
9	95022–08040	PERNO, DE BRIDA BOLT, FLANGE	2					
10	90201–22018	ARANDELA PLANA WASHER, PLATE	1					
11	90176–22081	TUERCA CORONA NUT, CAP	1					
12	B97–F3441–00	SOPORTE DE MANUBRIO HOLDER, HANDLE UPPER	2					UR UR
	B97–F3441–10	SOPORTE DE MANUBRIO HOLDER, HANDLE UPPER	2					UR UR
13	95022–08035	PERNO, DE BRIDA BOLT, FLANGE	4					
14	B97–F317E–00	SOPORTE 1 STAY 1	1					
15	21C–F317J–00	AMORTIGUADOR 1 DAMPER 1	2					
16	B97–F317F–00	SOPORTE 2 STAY 2	1					
17	95812–06016	TORNILLO DE REBORDE BOLT, FLANGE	2					
18	90387–07819	ESPACIADOR COLLAR	4					
19	95812–06012	TORNILLO DE REBORDE BOLT, FLANGE	2					

FIG. 20 HORQUILLA DELANTERA FRONT FORK

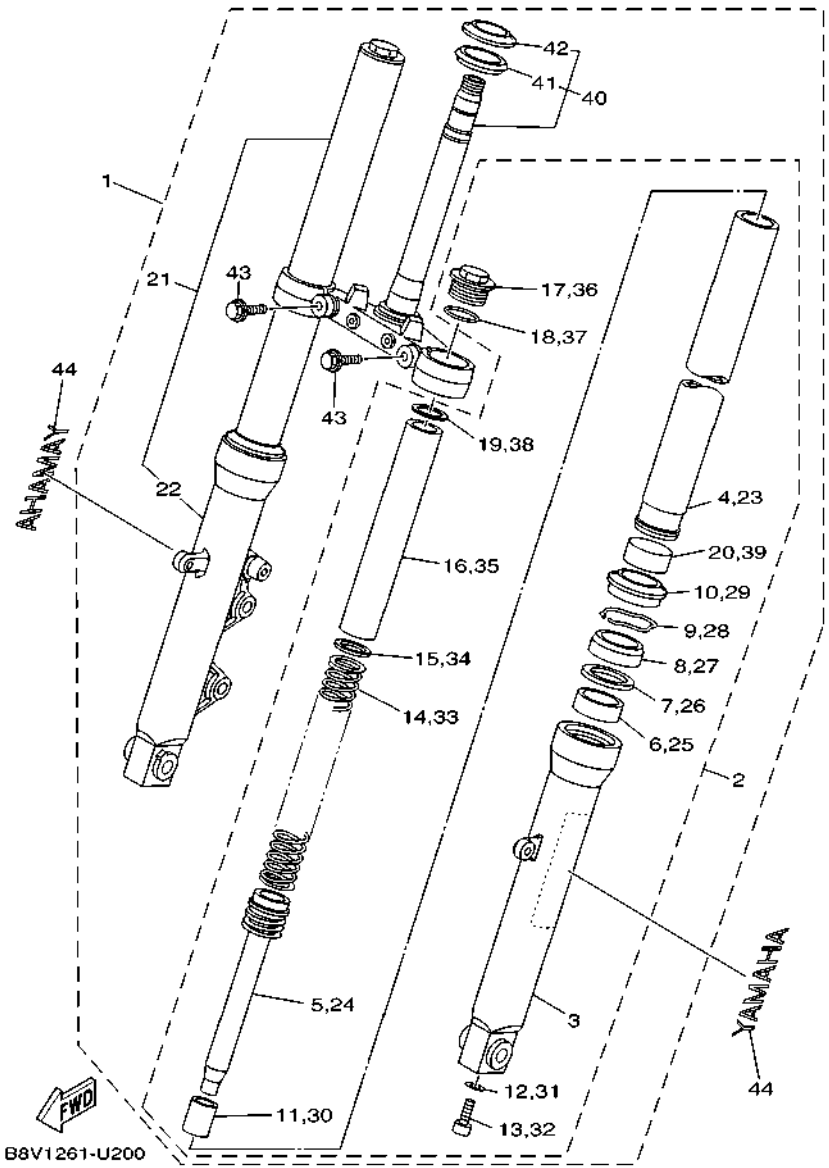

REF. Nº	CODIGO Nº PART NO.	DESCRIPCION DESCRIPTION	B8V1					OBSERVACIONES REMARKS
1	B8V–F3100–00	HORQUILLA DELANTERA COMPLETA FRONT FORK ASSY	1					
2	B97–F3102–00	.HORQUILLA DELANTERA COMPL.(MI) .FRONT FORK ASSY (L.H)	1					
3	21C–F3126–11	..TUBO EXTERIOR (IZQUIERDO) ..TUBE, OUTER (L.H)	1					
4	21C–F3110–00	..TUBO INTERIOR COMPLETO 1 ..INNER TUBE COMP.1	1					
5	B97–F3170–00	..CILINDRO COMPL DE HORQ DELANT ..CYLINDER COMP., FRONT FORK	1					
6	4FM–23125–40	..METAL CORREDIZO 1 ..METAL, SLIDE 1	1					
7	21C–F3146–00	..ARANDELA DE SELLO DE ACEITE ..WASHER, OIL SEAL	1					
8	2GS–F3145–00	..RETEN DE ACEITE ..OIL SEAL	1					
9	21C–F3156–00	..ANILLO DE ENGANCHE ..RING, SNAP	1					
10	2GS–F3144–00	..GUARDAPOLVO ..SEAL, DUST	1					
11	21C–F3173–00	..VASTAGO AHUSADO ..SPINDLE, TAPER	1					
12	21C–F3158–00	..EMPAQUE ..GASKET	1					
13	21C–F3181–00	..TORNILLO CABEZAHEXAGONAL ..BOLT, HEXAGON SOCKET HEAD	1					
14	B97–F3141–00	..RESORTE HORQUILLA DELANT. ..SPRING, FRONT FORK	1					
15	21C–F3149–00	..ARANDELA DE RESORTE SUPERIOR ..WASHER, SPRING UPPER	1					
16	B97–F3118–00	..SEPARADOR ..SPACER	1					
17	21C–F3111–00	..PERNO DE TAPA ..BOLT, CAP	1					
18	21C–F3114–00	..EMPAQUE ..GASKET	1					
19	21C–F2674–00	..ARANDELA 2 ..WASHER 2	1					
20	2GS–F3171–00	..PISTON HORQUILLA DELANT. ..BUSH, INNER TUBE	1					
21	B97–F3103–00	.HORQUILLA DELANTERA COMPL.(MD) .FRONT FORK ASSY (R.H)	1					
22	B97–F3136–00	..TUBO EXTERIOR 2 ..TUBE, OUTER 2	1					
23	21C–F3110–00	..TUBO INTERIOR COMPLETO 1 ..INNER TUBE COMP.1	1					
24	B97–F3170–00	..CILINDRO COMPL DE HORQ DELANT ..CYLINDER COMP., FRONT FORK	1					
25	4FM–23125–40	..METAL CORREDIZO 1 ..METAL, SLIDE 1	1					
26	21C–F3146–00	..ARANDELA DE SELLO DE ACEITE ..WASHER, OIL SEAL	1					
27	2GS–F3145–00	..RETEN DE ACEITE ..OIL SEAL	1					

FIG. 20 HORQUILLA DELANTERA — FRONT FORK

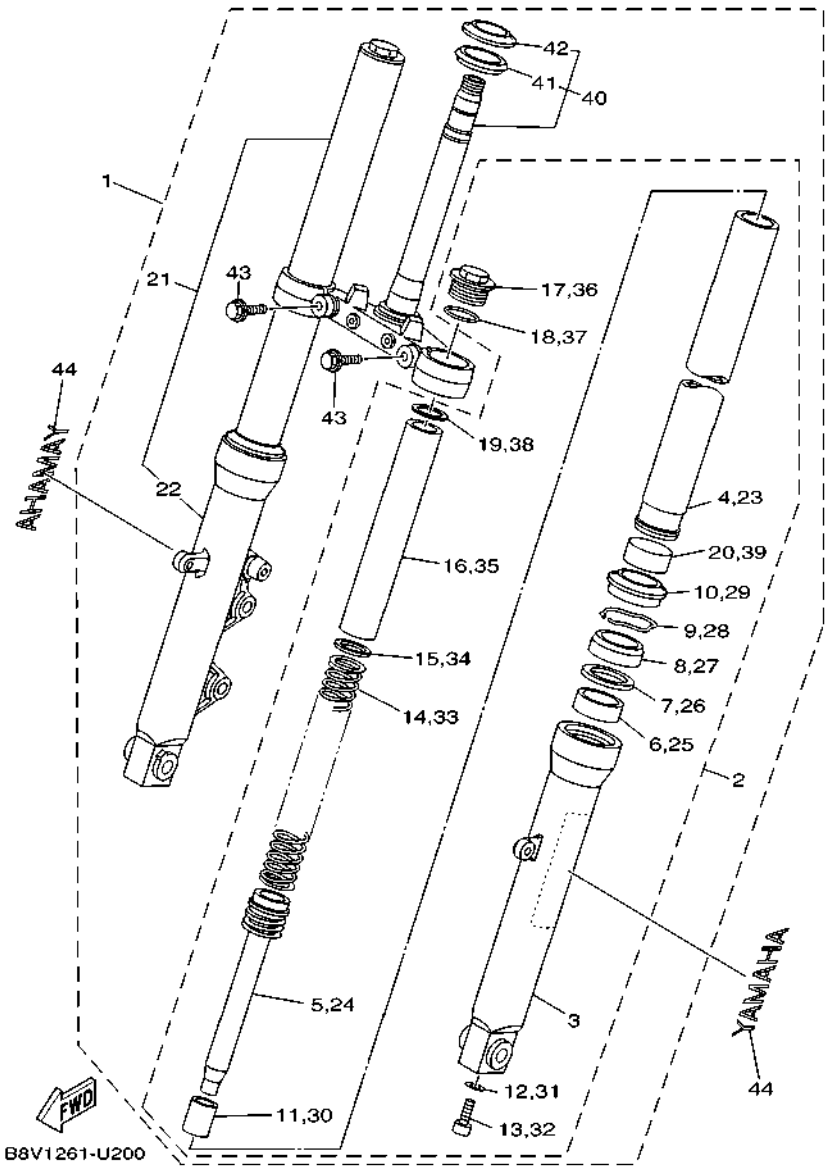

REF. Nº	CODIGO Nº PART NO.	DESCRIPCION DESCRIPTION	B8V1					OBSERVACIONES REMARKS
28	21C–F3156–00	..ANILLO DE ENGANCHE ..RING, SNAP	1					
29	2GS–F3144–00	..GUARDAPOLVO ..SEAL, DUST	1					
30	21C–F3173–00	..VASTAGO AHUSADO ..SPINDLE, TAPER	1					
31	21C–F3158–00	..EMPAQUE ..GASKET	1					
32	21C–F3181–00	..TORNILLO CABEZAHEXAGONAL ..BOLT, HEXAGON SOCKET HEAD	1					
33	B97–F3141–00	..RESORTE HORQUILLA DELANT. ..SPRING, FRONT FORK	1					
34	21C–F3149–00	..ARANDELA DE RESORTE SUPERIOR ..WASHER, SPRING UPPER	1					
35	B97–F3118–00	..SEPARADOR ..SPACER	1					
36	21C–F3111–00	..PERNO DE TAPA ..BOLT, CAP	1					
37	21C–F3114–00	..EMPAQUE ..GASKET	1					
38	21C–F2674–00	..ARANDELA 2 ..WASHER 2	1					
39	2GS–F3171–00	..PISTON HORQUILLA DELANT. ..BUSH, INNER TUBE	1					
40	21C–F3340–00	.PLATINA INFERIOR COMPLETA .UNDER BRACKET COMP.	1					
41	5YY–F3462–00	..SELLO PARA POLVO ..SEAL, DUST	1					
42	21C–F3411–00	..PISTA DE BOLAS 1 ..RACE, BALL 1	1					
43	21C–F3346–00	.PERNO 1 .BOLT 1	2					
44	99246–00120	EMBLEMA, YAMAHA EMBLEM, YAMAHA	2					

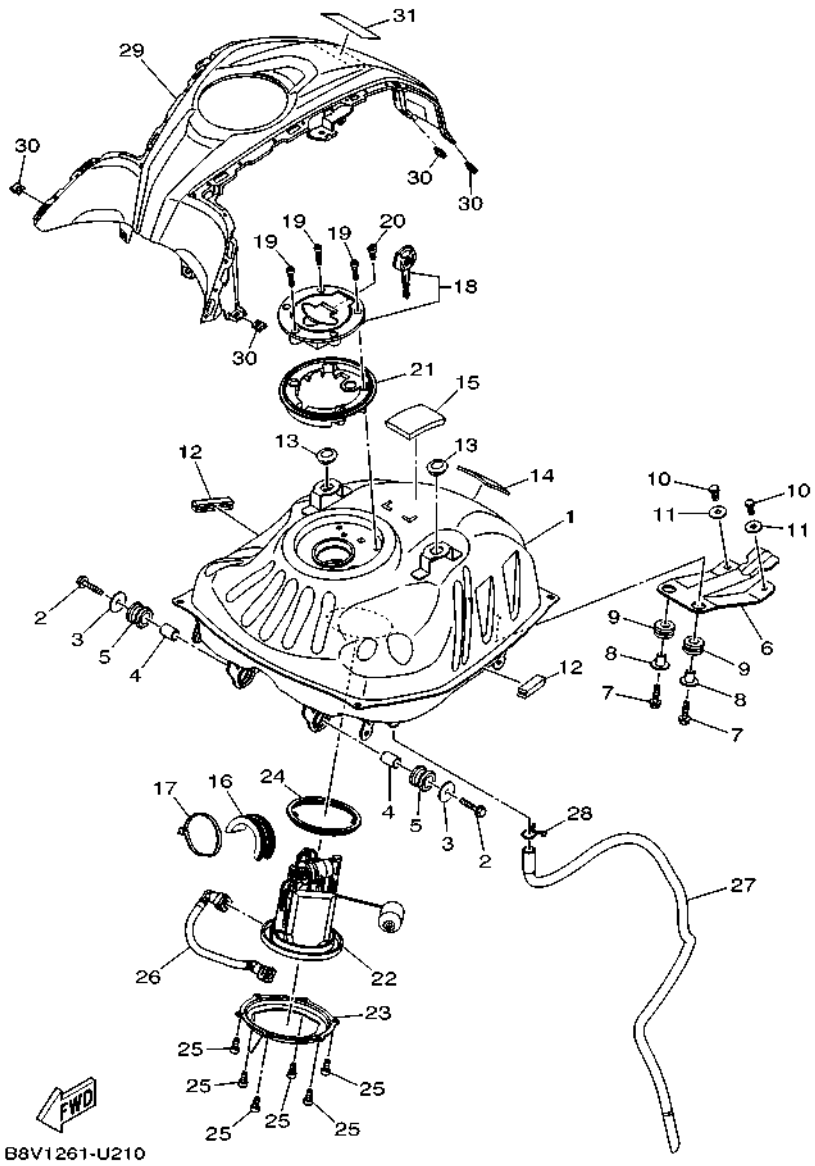

FIG. 21 DEPOSITO DE COMBUSTIBLE — FUEL TANK

REF. Nº	CODIGO Nº PART NO.	DESCRIPCION DESCRIPTION	B8V1					OBSERVACIONES REMARKS
1	B8V–F4110–01	DEPOSITO DE COMBUSTIBLE COMP. FUEL TANK COMP.	1					
2	95822–06030	TORNILLO DE REBORDE BOLT, FLANGE	2					
3	90201–06086	ARANDELA PLANA WASHER, PLATE	2					
4	90387–107H6	ESPACIADOR COLLAR	2					
5	21C–F4181–00	AMORTIGUADOR DE MONTAJE 1 DAMPER, LOCATING 1	2					
6	B97–F4191–00	SOPORTE DEPOSITO DE COMBUST.1 BRACKET, FUEL TANK 1	1					
7	90105–06169	TORNILLO BOLT, FLANGE	2					
8	90387–068B2	ESPACIADOR COLLAR	2					
9	90480–15363	TAPON GROMMET	2					
10	97012–06014	PERNO BOLT	2					
11	90201–06380	ARANDELA PLANA WASHER PLAIN	2					
12	B97–F4188–00	MOLDURA DEPOSITO COMBUST. MOLD, FUEL TANK	2					
13	90480–01558	TAPON GROMMET	2					
14	21C–F414H–00	EQUILIBRIO, CUBIERTA DAMPER, PLATE 1	1					
15	90520–08814	EQUILIBRIO, CUBIERTA DAMPER, PLATE	1					
16	21C–F4183–00	AMORTIGUADOR DE MONTAJE 3 DAMPER, LOCATING 3	1					
17	90464–80802	BRIDA CLAMP	1					
18	54D–WF461–11	TAPA DE DEPOSITO COMPLETO CAP ASSY WITH LOCK	1					
19	90110–05806	TORNILLO ALLEN BOLT, HEXAGON SOCKET HEAD	3					
20	91312–05010	TORNILLO ALLEN BOLT, HEXAGON SOCKET HEAD	1					
21	B97–F414F–00	TAPA DE RELLENO DE COMP. COVER, FILLER COMP.	1					
22	B97–E3907–00	BOMBA DE COMBUSTIBLE COMPLETA FUEL PUMP COMP.	1					
23	B97–F4491–00	SOPORTE BOMBA COMBUSTIBLE BRACKET, FUEL PUMP	1					
24	20P–F4486–00	ANILLO O O-RING	1					
25	91312–05010	TORNILLO ALLEN BOLT, HEXAGON SOCKET HEAD	6					
26	B97–E3971–00	ANILLO DE ESPACIADOR PIPE, FUEL 1	1					
27	90445–12805	TUBO HOSE	1					

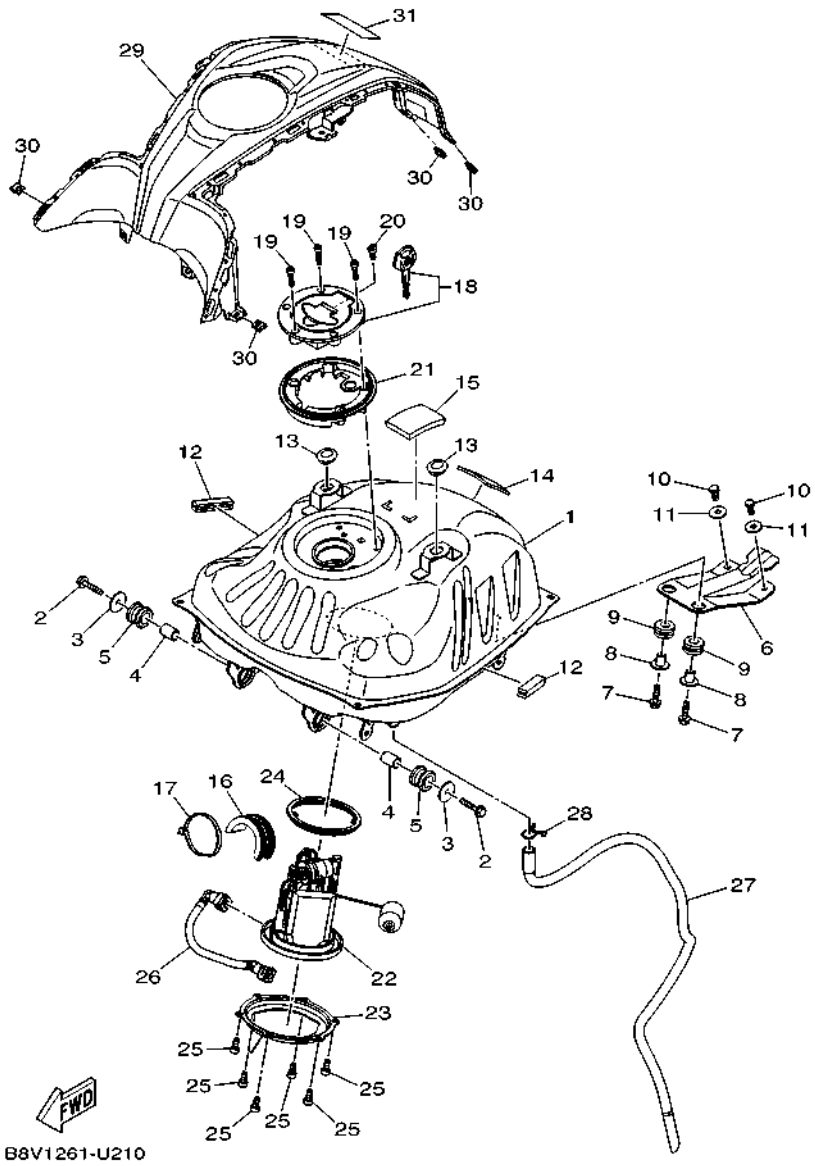

FIG. 21 DEPOSITO DE COMBUSTIBLE — FUEL TANK

REF. Nº	CODIGO Nº PART NO.	DESCRIPCION DESCRIPTION	B8V1					OBSERVACIONES REMARKS
28	90467–15012	PRESILLA CLIP	1					
29	B97–F171A–00	CUBIERTA, TECHO COVER, TOP	1					
30	90183–05807	TUERCA DE RESORTE NUT, SPRING	4					
31	B1L–F1568–00	ETIQUETA DE PRECAUCION LABEL, WARNING	1					

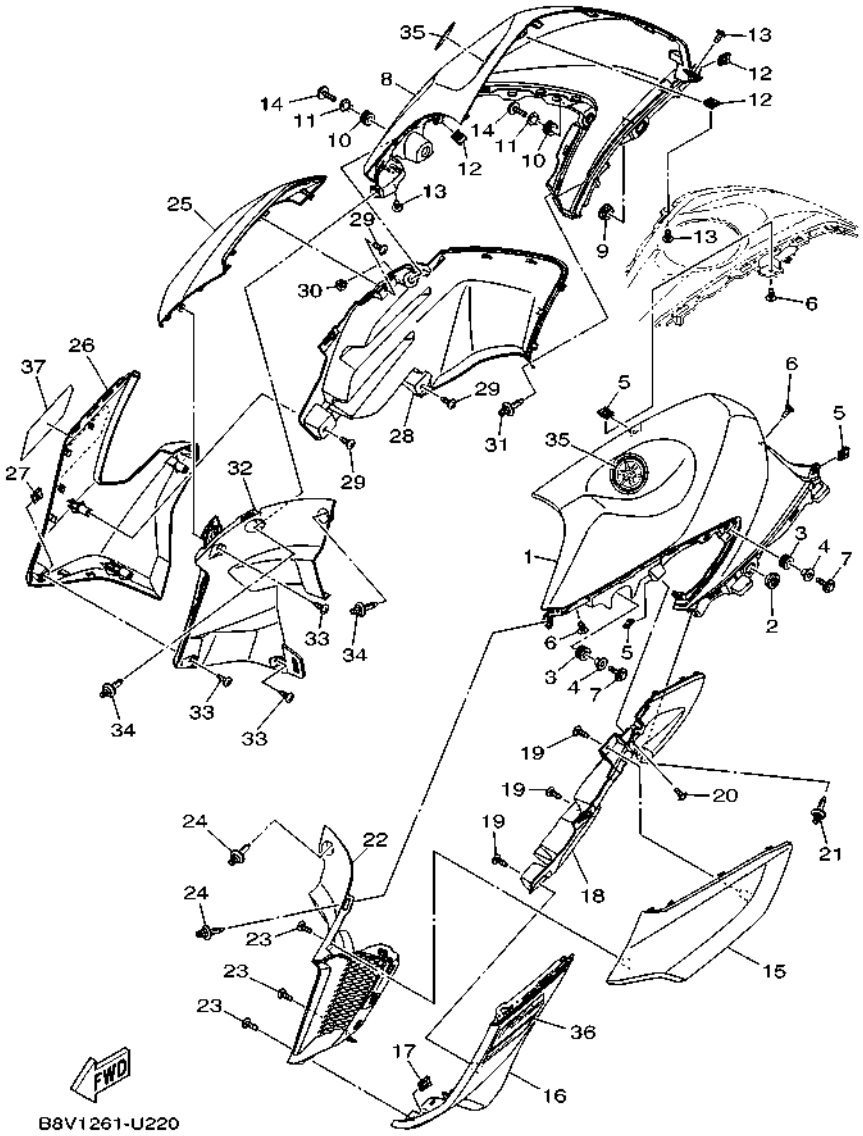

FIG. 22 DEPOSITO DE COMBUSTIBLE 2 FUEL TANK 2

REF. Nº	CODIGO Nº PART NO.	DESCRIPCION DESCRIPTION	B8V1					OBSERVACIONES REMARKS
1	B8V–F4129–00–P0	CUBIERTA LATERAL 1 COVER, SIDE 1	1					UR PARA SMX UR FOR SMX
	B8V–F4129–00–P1	CUBIERTA LATERAL 1 COVER, SIDE 1	1					UR PARA MBL2 UR FOR MBL2
	B8V–F4129–00–P2	CUBIERTA LATERAL 1 COVER, SIDE 1	1					UR PARA MDPBM1 UR FOR MDPBM1
2	90480–13398	TAPON GROMMET	1					
3	90480–12805	TAPON GROMMET	2					
4	90387–06899	ESPACIADOR COLLAR	2					
5	90183–05807	TUERCA DE RESORTE NUT, SPRING	3					
6	97702–50012	TORNILLO ROSCA HEMBRA SCREW, TAPPING	3					
7	90119–05801	TORNILLO CON ARANDELA BOLT, WITH WASHER	2					
8	B8V–F4139–00–P0	CUBIERTA LATERAL 2 COVER, SIDE 2	1					UR PARA SMX UR FOR SMX
	B8V–F4139–00–P1	CUBIERTA LATERAL 2 COVER, SIDE 2	1					UR PARA MBL2 UR FOR MBL2
	B8V–F4139–00–P2	CUBIERTA LATERAL 2 COVER, SIDE 2	1					UR PARA MDPBM1 UR FOR MDPBM1
9	90480–13398	TAPON GROMMET	1					
10	90480–12805	TAPON GROMMET	2					
11	90387–06899	ESPACIADOR COLLAR	2					
12	90183–05807	TUERCA DE RESORTE NUT, SPRING	3					
13	97702–50012	TORNILLO ROSCA HEMBRA SCREW, TAPPING	3					
14	90119–05801	TORNILLO CON ARANDELA BOLT, WITH WASHER	2					
15	B8V–F137W–00–P0	CUBIERTA DE GUIA DE AIRE 1 SCOOP, AIR 1	1					UR PARA SMX UR FOR SMX
	B8V–F137W–00–P1	CUBIERTA DE GUIA DE AIRE 1 SCOOP, AIR 1	1					UR PARA MBL2 UR FOR MBL2
	B8V–F137W–00–P2	CUBIERTA DE GUIA DE AIRE 1 SCOOP, AIR 1	1					UR PARA MDPBM1 UR FOR MDPBM1
16	B8V–F137U–00–P0	GUIA DE AIRE 1 GUIDE, AIR 1	1					UR CM6 PARA SMX UR CM6 FOR SMX
	B8V–F137U–00–P1	GUIA DE AIRE 1 GUIDE, AIR 1	1					UR SMX PARA MBL2 UR SMX FOR MBL2
	B8V–F137U–00–P2	GUIA DE AIRE 1 GUIDE, AIR 1	1					UR MNM3 PARA MDPBM1 UR MNM3 FOR MDPBM1
17	90183–05807	TUERCA DE RESORTE NUT, SPRING	1					
18	B97–F4121–00	ASIENTO MANGO DE RODILLA 1 SET, KNEE GRIP 1	1					
19	97702–50016	TORNILLO ROSCA HEMBRA SCREW, TAPPING	3					

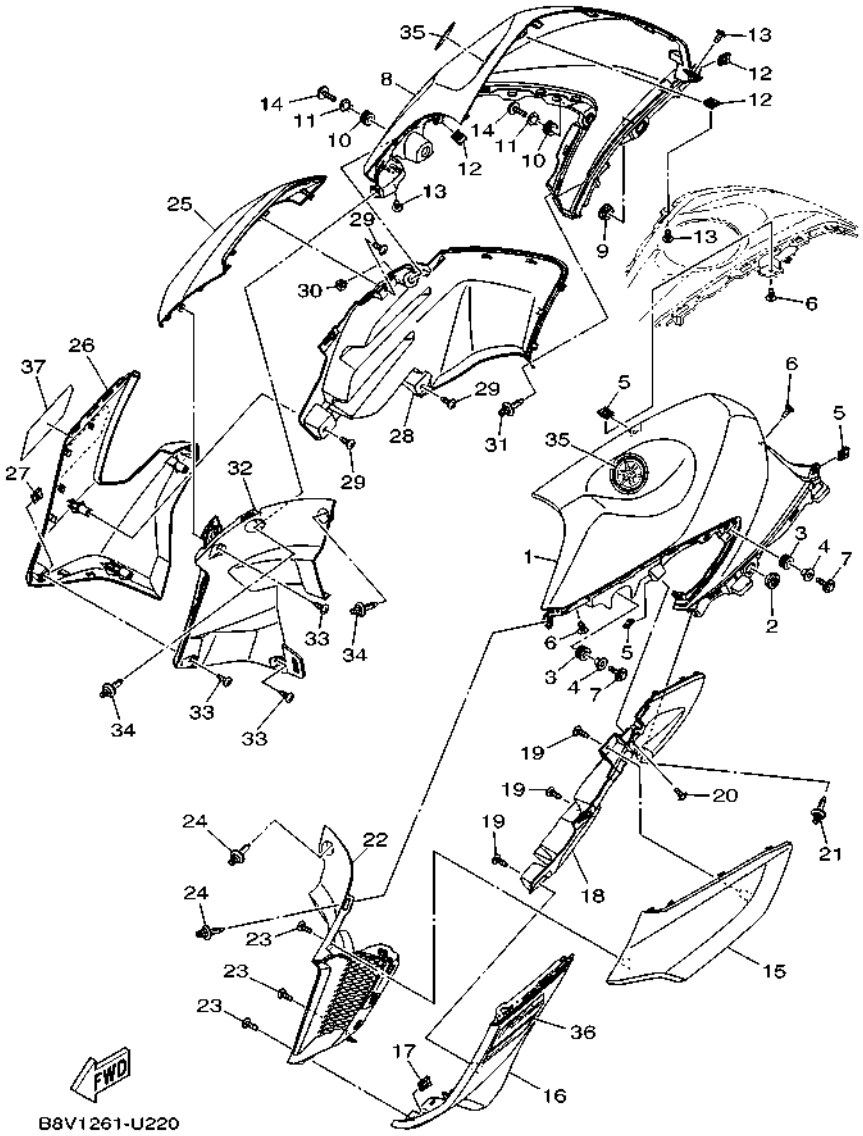

FIG. 22 DEPOSITO DE COMBUSTIBLE 2 FUEL TANK 2

REF. Nº	CODIGO Nº PART NO.	DESCRIPCION DESCRIPTION	B8V1					OBSERVACIONES REMARKS
20	97702–50012	TORNILLO ROSCA HEMBRA SCREW, TAPPING	1					
21	90269–06813	REMACHE RIVET	1					
22	B97–F836K–00	PANEL 1 PANEL, INNER 1	1					
23	97702–50016	TORNILLO ROSCA HEMBRA SCREW, TAPPING	3					
24	90269–06813	REMACHE RIVET	2					
25	B8V–F137X–00–P0	CUBIERTA DE GUIA DE AIRE 2 SCOOP, AIR 2	1					UR PARA SMX UR FOR SMX
	B8V–F137X–00–P1	CUBIERTA DE GUIA DE AIRE 2 SCOOP, AIR 2	1					UR PARA MBL2 UR FOR MBL2
	B8V–F137X–00–P2	CUBIERTA DE GUIA DE AIRE 2 SCOOP, AIR 2	1					UR PARA MDPBM1 UR FOR MDPBM1
26	B8V–F137V–00–P0	GUIA DE AIRE 2 GUIDE, AIR 2	1					UR CM6 PPARA SMX UR CM6 FOR SMX
	B8V–F137V–00–P1	GUIA DE AIRE 2 GUIDE, AIR 2	1					UR SMX PARA MBL2 UR SMX FOR MBL2
	B8V–F137V–00–P2	GUIA DE AIRE 2 GUIDE, AIR 2	1					UR MNM3 PARA MDPBM1 UR MNM3 FOR MDPBM1
27	90183–05807	TUERCA DE RESORTE NUT, SPRING	1					
28	B97–F4122–00	ASIENTO MANGO DE RODILLA 2 SET, KNEE GRIP 2	1					
29	97702–50016	TORNILLO ROSCA HEMBRA SCREW, TAPPING	3					
30	97702–50012	TORNILLO ROSCA HEMBRA SCREW, TAPPING	1					
31	90269–06813	REMACHE RIVET	1					
32	B97–F836L–00	PANEL 2 PANEL, INNER 2	1					
33	97702–50016	TORNILLO ROSCA HEMBRA SCREW, TAPPING	3					
34	90269–06813	REMACHE RIVET	2					
35	B84–F413B–00	EMBLEMA EMBLEM	2					
36	B8V–F4244–00	CALCOMANIA DEPOSITO COMBUST.1 GRAPHIC, FUEL TANK 1	1					UR PARA SMX UR FOR SMX
	B8V–F4244–10	CALCOMANIA DEPOSITO COMBUST.1 GRAPHIC, FUEL TANK 1	1					UR PARA MBL2 UR FOR MBL2
	B8V–F4244–20	CALCOMANIA DEPOSITO COMBUST.1 GRAPHIC, FUEL TANK 1	1					UR PARA MDPBM1 UR FOR MDPBM1
37	B8V–F4245–00	CALCOMANIA DEPOSITO COMBUST.2 GRAPHIC, FUEL TANK 2	1					UR PARA SMX UR FOR SMX
	B8V–F4245–10	CALCOMANIA DEPOSITO COMBUST.2 GRAPHIC, FUEL TANK 2	1					UR PARA MBL2 UR FOR MBL2
	B8V–F4245–20	CALCOMANIA DEPOSITO COMBUST.2 GRAPHIC, FUEL TANK 2	1					UR PARA MDPBM1 UR FOR MDPBM1

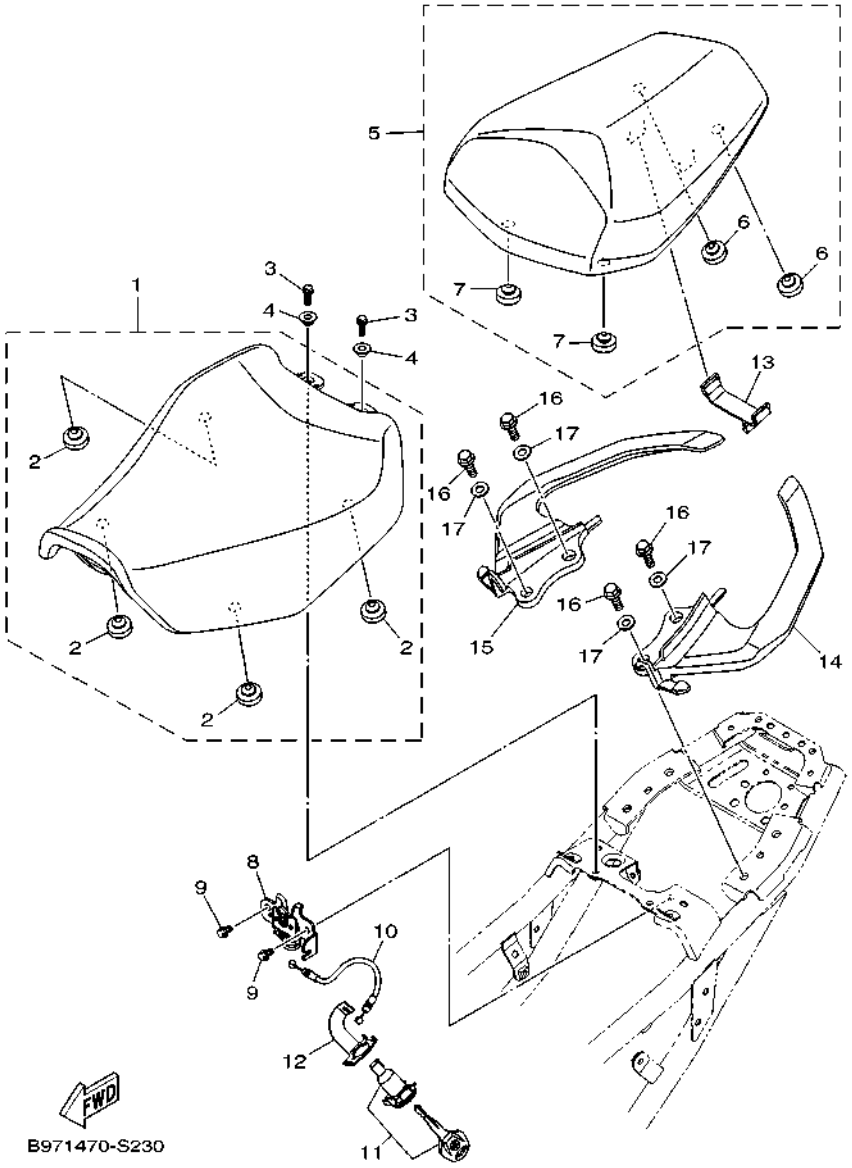

FIG. 23 ASIENTO SEAT

REF. Nº	CODIGO Nº PART NO.	DESCRIPCION DESCRIPTION	B8V1					OBSERVACIONES REMARKS
1	B8V–F4710–00	ASIENTO SIMPLE COMPLETO SINGLE SEAT ASSY	1					
2	45D–F4741–00	.COJIN DE ASIENTO .PAD, SEAT	4					
3	95022–06016	PERNO, DE BRIDA BOLT, FLANGE	2					
4	90387–068N2	ESPACIADOR COLLAR	2					
5	B8V–F4750–00	ASIENTO TANDEM COMPLETO TANDEM SEAT ASSY	1					
6	45D–F4741–00	COJIN DE ASIENTO PAD, SEAT	2					
7	4LS–F4741–00	COJIN DE ASIENTO PAD, SEAT	2					
8	21C–F4780–01	CERRADURA SILLIN COMPLETO SEAT LOCK ASSY	1					
9	95027–06010	PERNO, DE BRIDA BOLT, FLANGE	2					
10	B97–F478E–00	CABLE CABLE, SEAT LOCK	1					
11	1GC–WF479–00	CUBIERTA, DE COLA ROTOR SUB ASSY WITH KEY	1					
12	1GC–F117K–00	SOPORTE DE CERRADURA STAY, LOCK	1					
13	4UU–F811G–00	CINTA BAND	1					
14	B97–F474A–01–P1	FIADOR DE EMPUNADURA ASSIST, GRIP	1					S8 S8
15	B97–F474W–01–P1	FIADOR DE EMPUNADURA 2 ASSIST,GRIP 2	1					S8 S8
16	95812–08025	TORNILLO DE REBORDE BOLT, FLANGE	4					
17	92902–08200	ARANDELA WASHER	4					

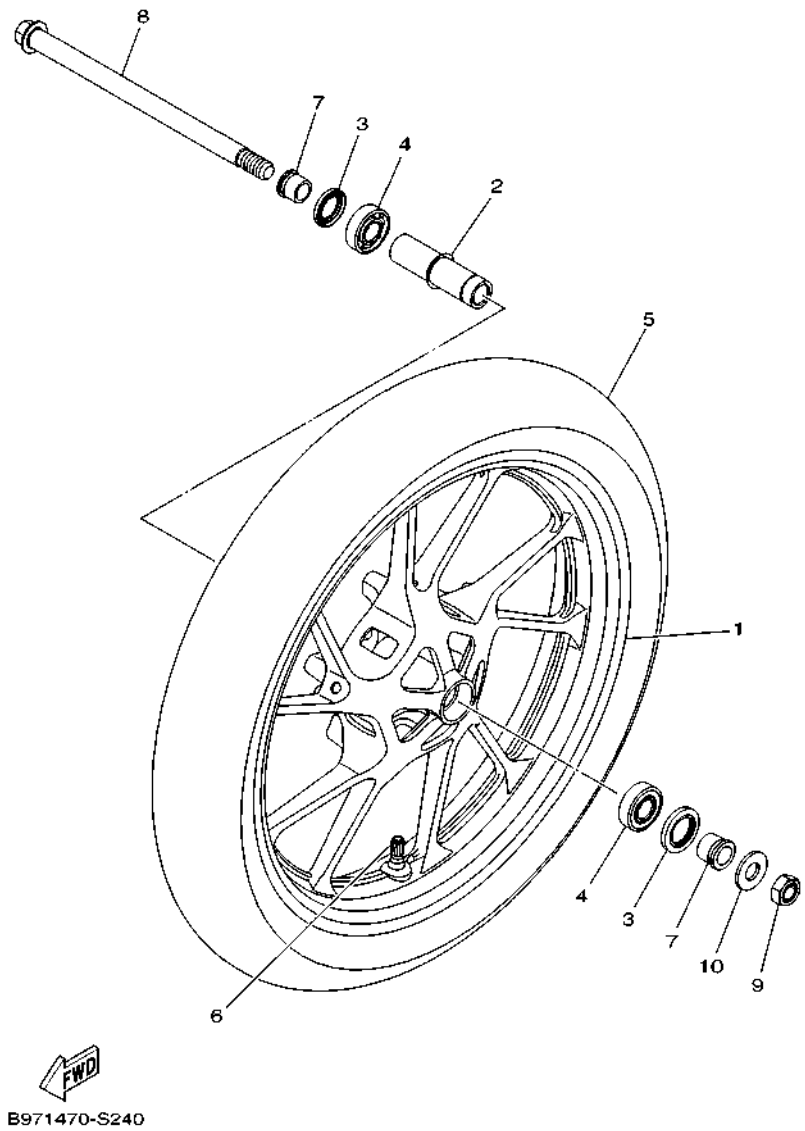

FIG. 24 RUEDA DELANTERA — FRONT WHEEL

REF. Nº	CODIGO Nº PART NO.	DESCRIPCION DESCRIPTION	B8V1					OBSERVACIONES REMARKS
1	B97–F5168–01–33	RUEDA FUNDIDA DELANTERA CAST WHEEL, FRONT	1					YB YB
2	21C–F510C–10	COLLAR COLLAR ASSY.	1					
3	93106–22808	SELLO ACEITE OIL SEAL	2					
4	93306–252XG	COJINETE BEARING	2					
5	94110–17818	NEUMATICO(100/80-17 MC 52P) TIRE (100/80-17 MC 52P)	1					MRF MRF
6	93900–00824	VALVULA VALVE, RIM	1					
7	1CK–F5186–00	COLLAR DE RUEDA COLLAR, WHEEL	2					
8	21C–F5181–00	EJE DE LA RUEDA AXLE, WHEEL	1					
9	90185–14800	TUERCA AUTOBLOCANTE NUT, SELF-LOCKING	1					
10	92907–14200	ARANDELA WASHER	1					

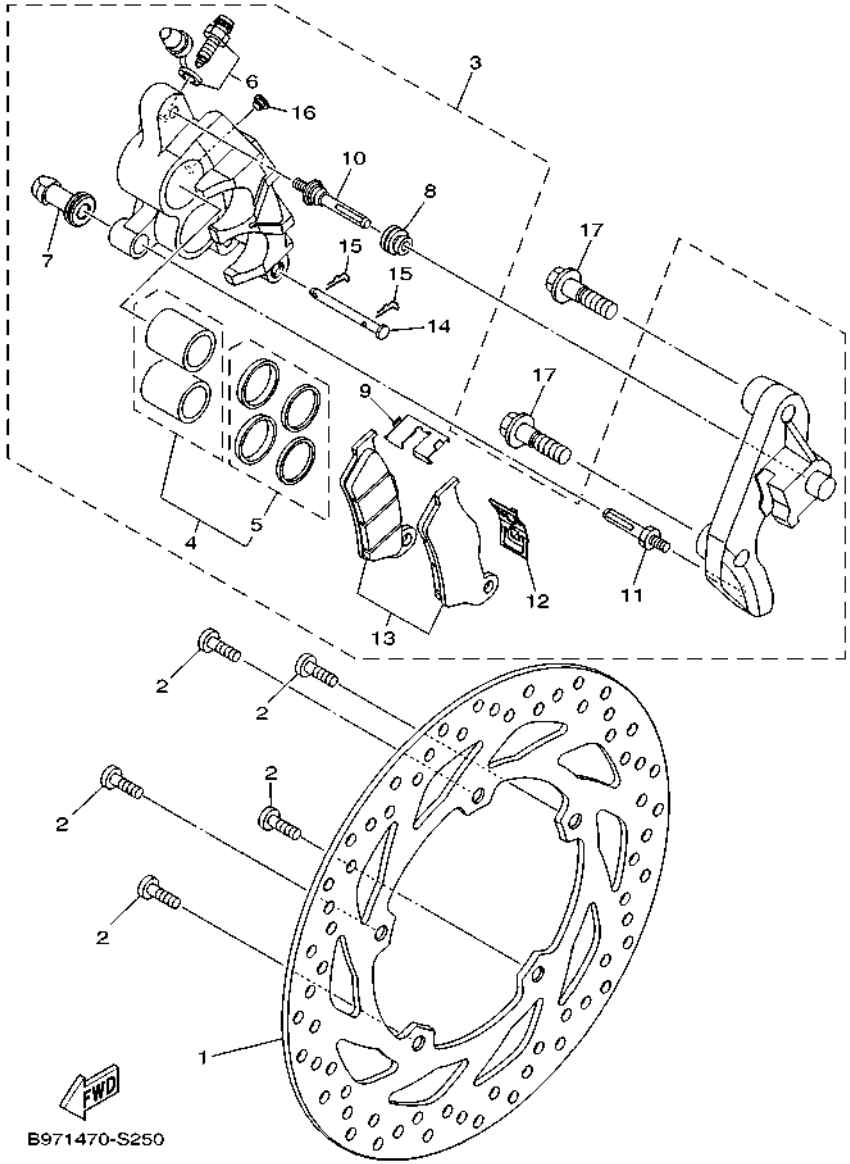

FIG. 25 CALIBRE FRENO DELANTERA — FRONT BRAKE CALIPER

REF. Nº	CODIGO Nº PART NO.	DESCRIPCION DESCRIPTION	B8V1					OBSERVACIONES REMARKS
1	B97–F582U–00	DISCO DE FRENO (DERECHO) DISK, BRAKE (RIGHT)	1					
2	90111–08029	TORNILLO BOLT,HEX. SOCKET BUTTON	5					
3	B97–F580U–00	CALIBRE COMPLETO (DERECHO) CALIPER ASSY (RIGHT)	1					
4	54B–W0057–00	.PISTON COMPLETO PINZA .PISTON ASSY, CALIPER	1					
5	54B–W0047–00	..JUEGO DE RETENES DE PINZA ..CALIPER SEAL KIT	1					
6	54B–W0048–00	.CJTO TORNILLO DE PURGA .BLEED SCREW KIT	1					
7	54B–F5937–00	.FUNDA .BOOT 2	1					
8	54B–F5917–00	.FUNDA DE CALIBRE .BOOT, CALIPER	1					
9	54B–F5939–00	.PRESILLA .CLIP, PAD	1					
10	54B–F5914–00	.PASADOR .PIN, SLIDE	1					
11	54B–F5926–00	.PERNO .BOLT	1					
12	54B–F5919–00	.SOPORTE DE PASTILLAS .SUPPORT, PAD	1					
13	B97–W0045–00	.JUEGO DE COJIN DE FRENO .BRAKE PAD KIT	1					
14	54B–F5924–00	.PASADOR .PIN, PAD	1					
15	54B–F5925–00	.PRESILLA .CLIP	2					
16	54B–F5916–00	.TAPON .PLUG	1					
17	90105–10319	TORNILLO BOLT, FLANGE	2					

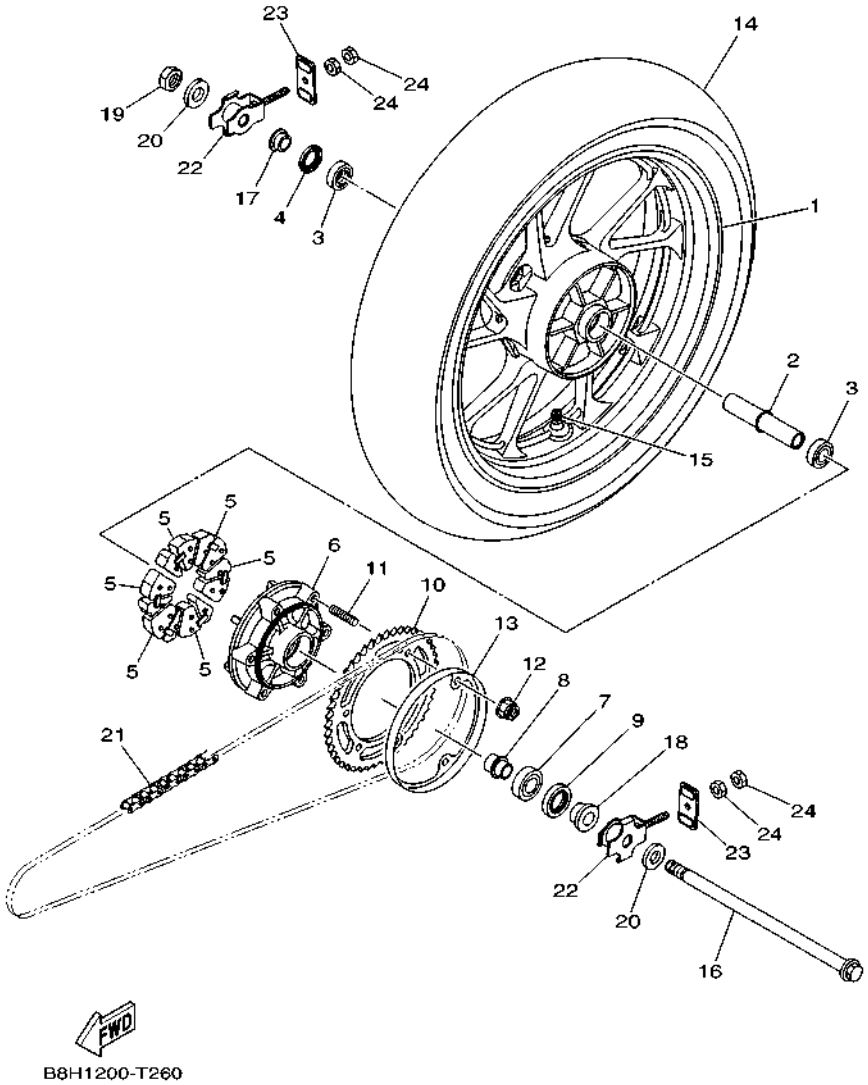

FIG. 26 RUEDA TRASERA — REAR WHEEL

REF. Nº	CODIGO Nº PART NO.	DESCRIPCION DESCRIPTION	B8V1					OBSERVACIONES REMARKS
1	B97–F5338–01–33	RUEDA FUNDIDA TRASERA CAST WHEEL, REAR	1					YB YB
2	B97–F530S–00	ASAMBLEA DE COLLAR COLLAR ASSY	1					
3	93306–252XG	COJINETE BEARING	2					
4	93106–22808	SELLO ACEITE OIL SEAL	1					
5	B97–F5364–00	AMORTIGUADOR DAMPER	6					
6	B97–F5366–00	EMBRAGUE DE MASA CLUTCH, HUB	1					
7	93306–054YA	COJINETE BEARING	1					
8	B97–F5376–00	COLLAR DE RUEDA COLLAR, WHEEL	1					
9	93106–26801	SELLO ACEITE OIL SEAL	1					
10	B97–F5446–00	CORONA (46D) SPROCKET, DRIVEN (46T)	1					
11	90116–08812	ESPARRAGO BOLT, STUD	6					
12	95602–08200	TUERCA DE AUTO-CIERRE NUT, U FLANGE	6					
13	BK6–F5414–00	ESPACIADOR SPACER	1					
14	94114–17806	NEUMATICO (140/70-17 M/C 66S) TIRE (140/70-17 M/C 66S)	1					MRF MRF
15	93900–00824	VALVULA VALVE, RIM	1					
16	21C–F5381–00	EJE DE RUEDA AXLE, WHEEL	1					
17	B97–F5377–00	COLLAR DE RUEDA COLLAR, WHEEL	1					
18	B97–F5383–00	COLLAR DE RUEDA COLLAR, WHEEL	1					
19	90185–14800	TUERCA AUTOBLOCANTE NUT, SELF-LOCKING	1					
20	90201–15814	ARANDELA PLANA WASHER, PLATE	2					
21	94568–K3136	CADENA CHAIN	1					
22	B97–F5388–00	TIRADOR DE CADENA 1 PULLER, CHAIN 1	2					
23	B97–F2174–00	EXTREMO 1 END 1	2					
24	95302–08600	TUERCA NUT, HEXAGON	4					

FIG. 27 CALIBRE FRENO TRASERA — REAR BRAKE CALIPER

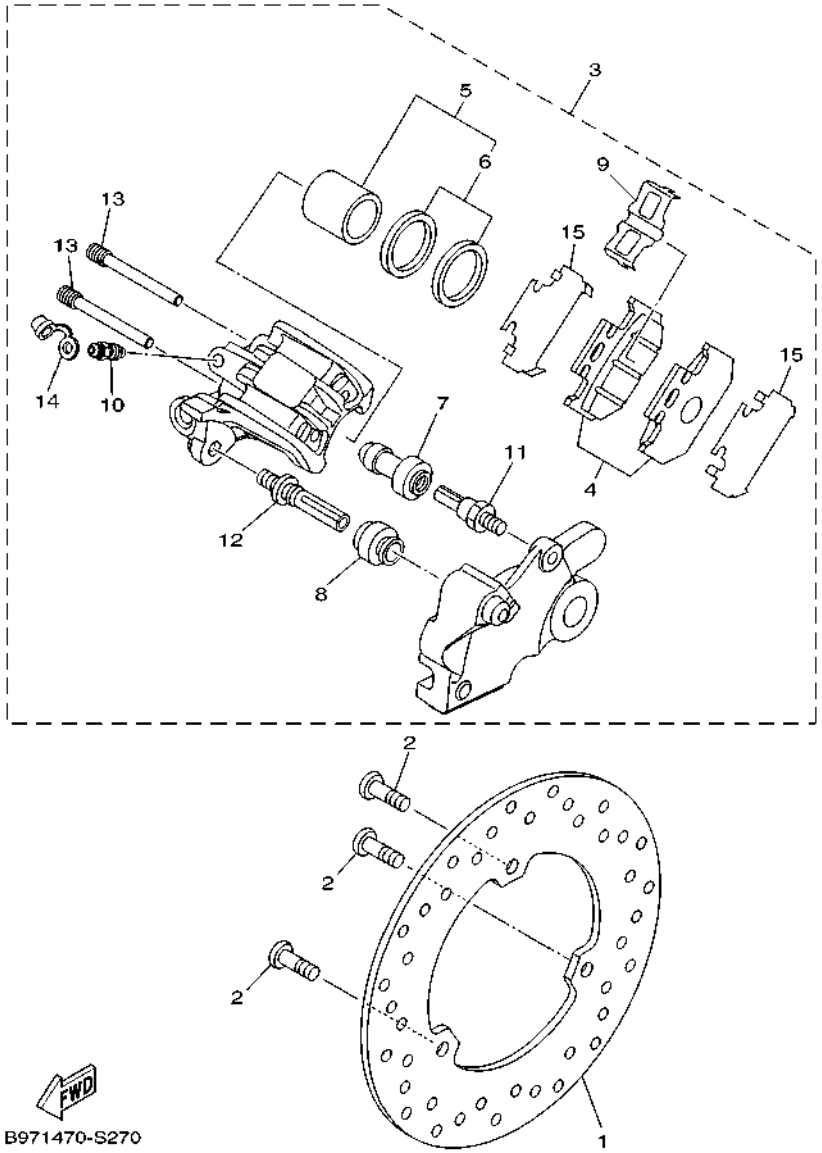

REF. Nº	CODIGO Nº PART NO.	DESCRIPCION DESCRIPTION	B8V1					OBSERVACIONES REMARKS
1	B97–F582W–00	DISCO DE FRENO TRASEROS 2 DISK, REAR BRAKE 2	1					
2	90111–08029	TORNILLO BOLT,HEX. SOCKET BUTTON	3					
3	B97–F580W–00	CALIBRE COMPLETO TRASEROS 2 CALIPER ASSY, REAR 2	1					
4	B97–F5806–00	.JUEGO DE PASTILLAS DE FRENO 2 .BRAKE PAD KIT 2	1					
5	5XT–25802–50	.PISTON COMPLETO PINZA .PISTON ASSY, CALIPER	1					
6	3JD–25803–50	..JUEGO DE RETENES DE PINZA ..CALIPER SEAL KIT	1					
7	5HH–F5937–00	.FUNDA .BOOT 2	1					
8	5HH–F5917–00	.FUNDA DE CALIBRE .BOOT, CALIPER	1					
9	3SP–25919–51	.SOPORTE DE PASTILLAS .SUPPORT, PAD	1					
10	5HH–F5824–00	.TORNILLO DE RESPIRADERO .SCREW, BLEED	1					
11	5HH–F5914–00	.PASADOR .PIN, SLIDE	1					
12	3SP–25926–51	.PERNO .BOLT	1					
13	3SP–25924–51	.PASADOR .PIN, PAD	2					
14	5HH–F5825–51	.TAPA .CAP	1					
15	5XT–25827–00	.CUNA DE CALIBRE .SHIM, CALIPER	2					

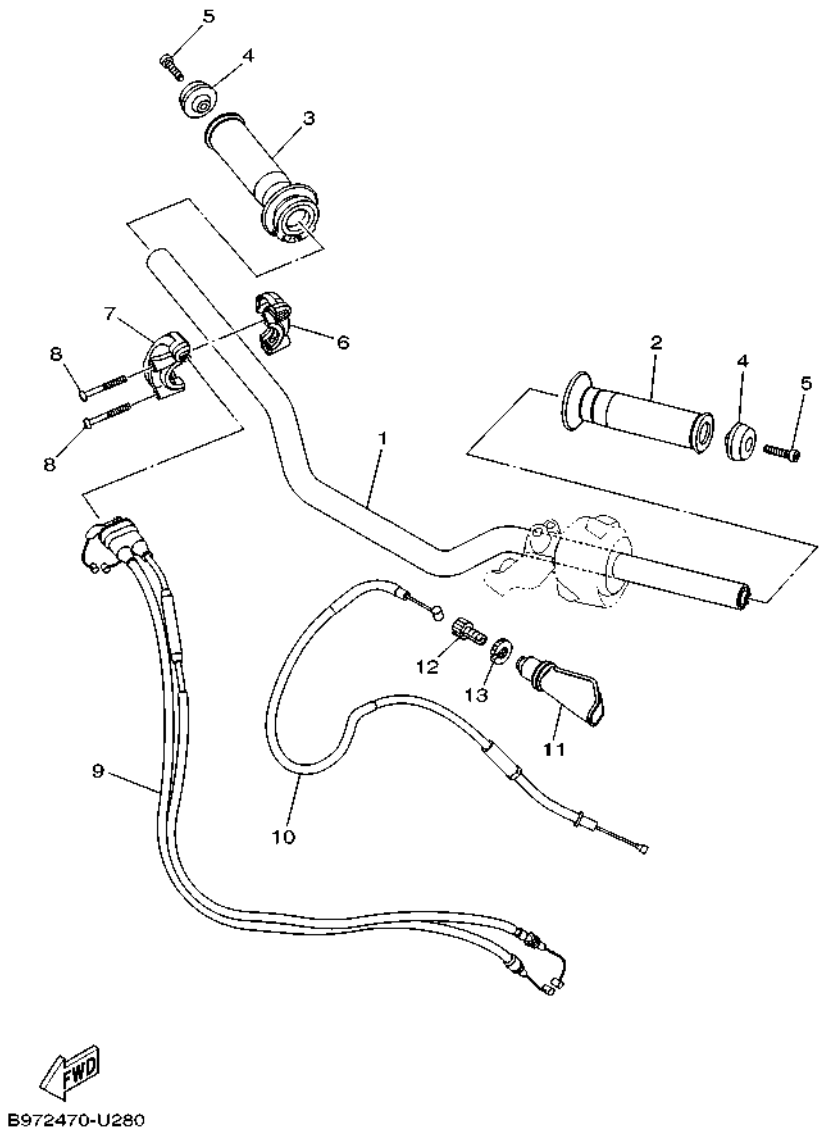

FIG. 28 MANILLAR & CABLE — STEERING HANDLE & CABLE

REF. Nº	CODIGO Nº PART NO.	DESCRIPCION DESCRIPTION	B8V1					OBSERVACIONES REMARKS
1	B97–F6110–00	MANUBRIO COMPLETE HANDLE COMP.	1					
2	21C–F6241–00	EMPUNADURA GRIP	1					
3	B97–F6240–00	EMPUNADURA COMPLETA GRIP ASSY	1					
4	B97–F6246–01	EXTREMO DE EMPUNADURA END, GRIP	2					
5	91312–06025	TORNILLO ALLEN BOLT, HEXAGON SOCKET HEAD	2					
6	B97–F6281–00	TAPA DE EMPUNADURA SUPERIOR CAP, GRIP UPPER	1					
7	B97–F6282–00	TAPA, EMPUNADURA INFERIOR CAP, GRIP UNDER	1					
8	98507–05040	TORNILLO DE CABEZA PLANA SCREW, PAN HEAD	2					
9	B97–F6302–00	CABLE DE ACELERADOR COMPLETO THROTTLE CABLE ASSY	1					
10	B97–F6335–01	CABLE DE EMBRAGUE WIRE, CLUTCH	1					
11	4TL–F6372–00	CUBIERTA DE PALANCA DE MANUB 1 COVER, HANDLE LEVER 1	1					
12	90123–08046	PERNO BOLT	1					
13	90179–08148	TUERCA NUT	1					

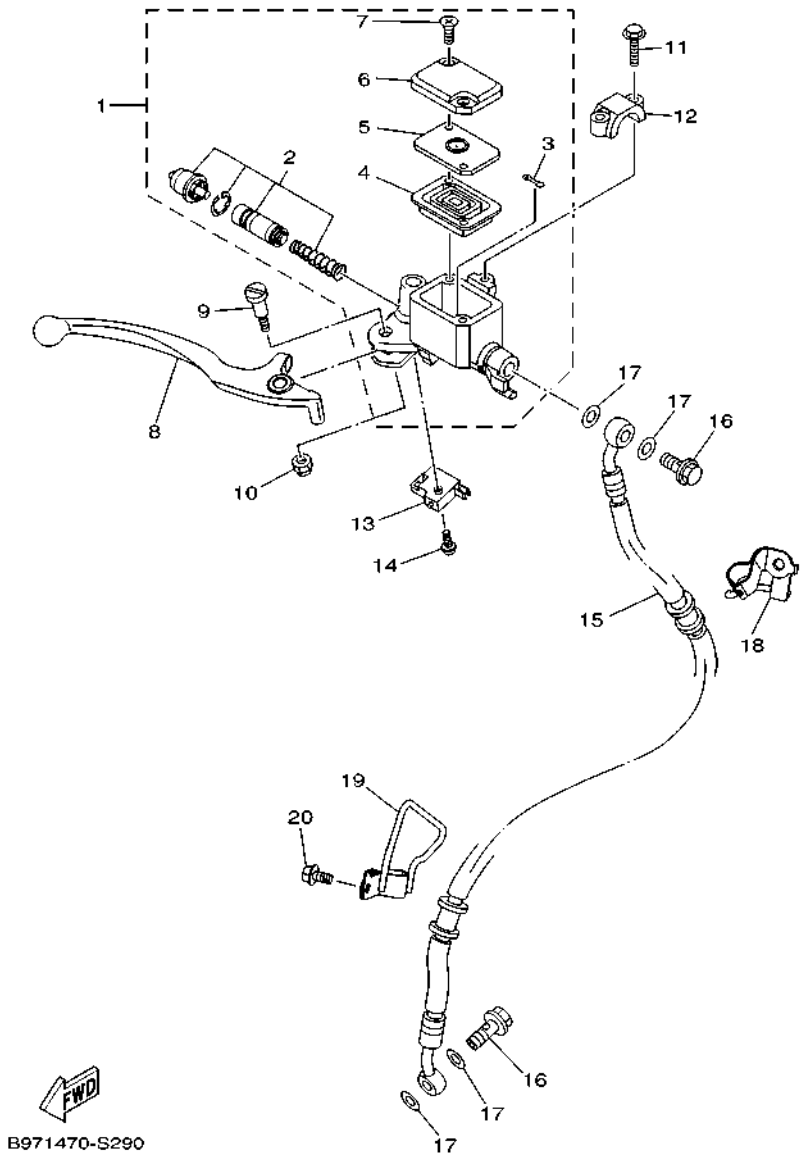

FIG. 29 CILINDRO MAESTRO DELANTERO — FRONT MASTER CYLINDER

REF. Nº	CODIGO Nº PART NO.	DESCRIPCION DESCRIPTION	B8V1					OBSERVACIONES REMARKS
1	B97–F580A–00	CILINDRO MAESTRO SUB COMPLET 2 MASTER CYLINDER SUB ASSY 2	1					
2	B97–F5807–00	.JUEGO DE CILINDRO MAESTRO .CYLINDER KIT, MASTER	1					
3	B97–F5715–00	.CUBIERTA 1 .COVER 1	1					
4	54B–F5854–00	.EMPAQUE,DIAFRAGMA .DIAPHRAGM, RESERVOIR	1					
5	54B–F5855–00	.BUJE DE DIAFRAGMA .BUSH,DIAPHRAGM	1					
6	54B–F5852–00	.TAPA DE TANQUE DE RESERVA .CAP, RESERVOIR	1					
7	54B–F589H–00	.TORNILLO .SCREW	2					
8	B97–H3922–00	PALANCA 2 LEVER 2	1					
9	90109–06859	PERNO BOLT	1					
10	54B–F6338–00	TUERCA DE AJUSTE NUT, ADJUSTING	1					
11	90105–06859	TORNILLO BOLT, FLANGE	2					
12	B97–F5867–00	SOPORTE DE CILINDRO MAESTRO BRACKET, MASTER CYLINDER	1					
13	B97–H3980–00	INTERRUP. DE PARADA DELANTERO FRONT STOP SWITCH ASSY	1					
14	B97–F589H–00	TORNILLO SCREW	1					
15	B97–F5872–00	MANGUERA DE FRENO 1 HOSE, BRAKE 1	1					
16	90401–10818	PERNO DE UNION BOLT, UNION	2					
17	90201–10815	ARANDELA PLANA WASHER, PLATE	4					
18	B97–F5875–00	SOPORTE DE MANGUERA FRENO 1 HOLDER, BRAKE HOSE 1	1					
19	B97–F5876–00	SOPORTE DE MANGUERA FRENO 2 HOLDER, BRAKE HOSE 2	1					
20	95812–06012	TORNILLO DE REBORDE BOLT, FLANGE	1					

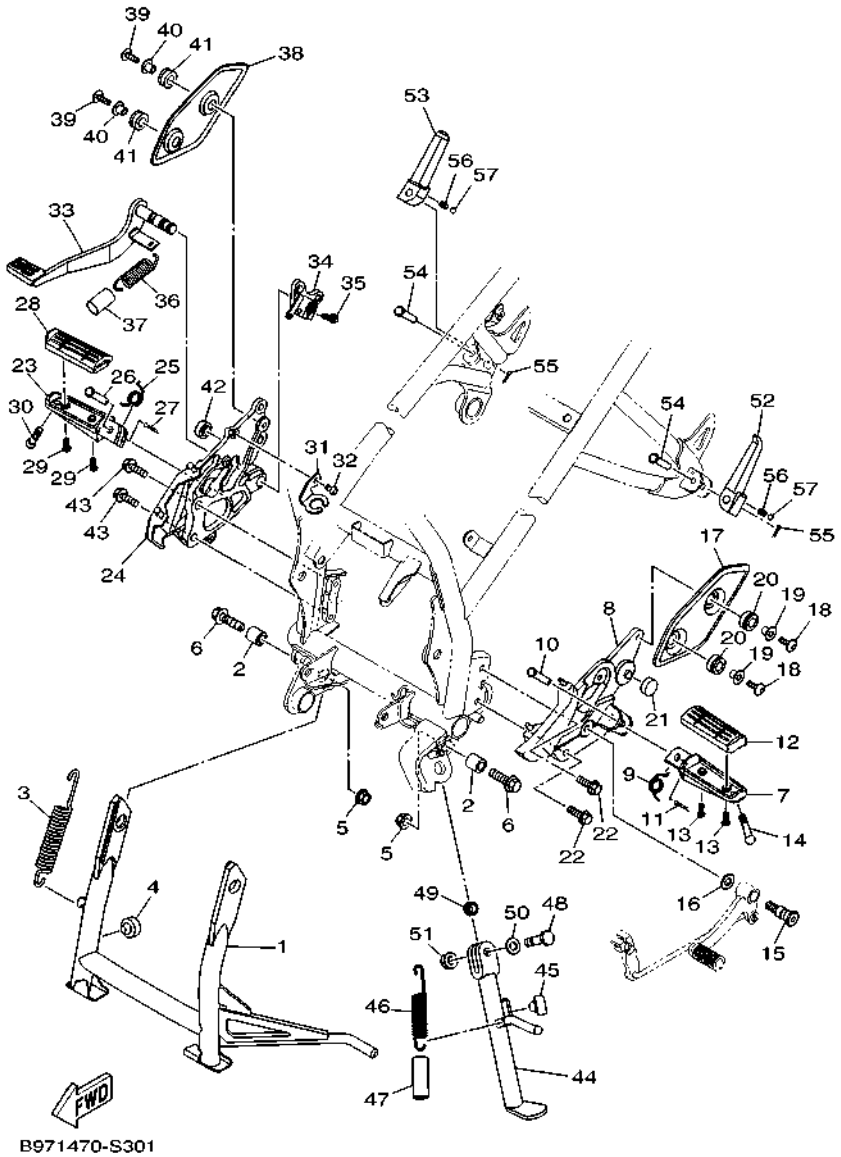

FIG. 30 SOPORTE & APOYAPIE — STAND & FOOTREST

REF. Nº	CODIGO Nº PART NO.	DESCRIPCION DESCRIPTION	B8V1					OBSERVACIONES REMARKS
1	B97–F7111–00	PUNTAL PRINCIPAL STAND, MAIN	1					
2	90387–10822	ESPACIADOR COLLAR	2					
3	90506–35816	RESORTE DE TENSION SPRING, TENSION	1					
4	21C–F7114–00	TOPE DE PUNTAL PRINCIPAL STOPPER, MAIN STAND	1					
5	95602–10200	TUERCA DE AUTO-CIERRE NUT, S/L FLANGE	2					
6	95812–10035	TORNILLO DE REBORDE BOLT, FLANGE	2					
7	45D–F7451–00	APOYAPIE FOOTREST 3	1					
8	B97–F7452–00	SOPORTE, DE APOYAPIE 1 BRACKET, FOOTREST 1	1					
9	90508–183B9	RESORTE DE TORSION SPRING, TORSION	1					
10	91701–08040	PASADOR DE ABRAZADERA PIN	1					
11	90252–22800	PASADOR DE CHAVETA PIN, SPLIT	1					
12	21C–F7413–01	CUBIERTA DE APOYAPIE COVER, FOOTREST	1					
13	98502–05014	TORNILLO SCREW, PAN HEAD	2					
14	90109–08202	PERNO BOLT	1					
15	45D–F7261–00	EJE SHAFT	1					
16	90201–10841	ARANDELA PLANA WASHER, PLATE	1					
17	B97–F7445–00	PLACE 1 PLATE 1	1					
18	90149–06829	TORNILLO DE REGLAJE SCREW	2					
19	90387–068P8	ESPACIADOR COLLAR	2					
20	90480–14829	TAPON GROMMET	2					
21	B97–F7114–00	TOPE STOPPER	1					
22	95817–08025	TORNILLO BOLT, FLANGE	2					
23	45D–F7461–00	APOYAPIE FOOTREST 4	1					
24	B97–F7462–00	SOPORTE, DE APOYAPIE 2 BRACKET, FOOTREST 2	1					
25	90508–183B9	RESORTE DE TORSION SPRING, TORSION	1					
26	91701–08040	PASADOR DE ABRAZADERA PIN	1					
27	90252–22800	PASADOR DE CHAVETA PIN, SPLIT	1					

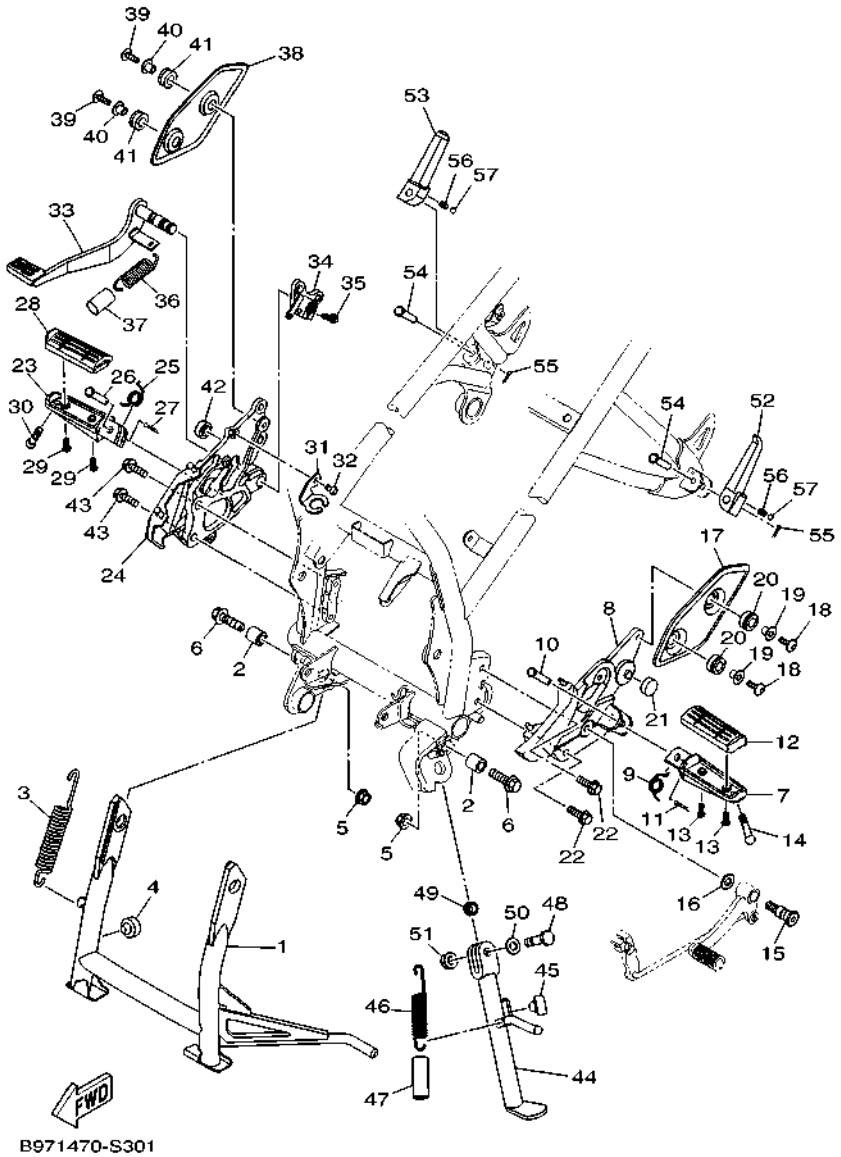

FIG. 30 SOPORTE & APOYAPIE — STAND & FOOTREST

REF. Nº	CODIGO Nº PART NO.	DESCRIPCION DESCRIPTION	B8V1					OBSERVACIONES REMARKS
28	21C–F7413–01	CUBIERTA DE APOYAPIE COVER, FOOTREST	1					
29	98502–05014	TORNILLO SCREW, PAN HEAD	2					
30	90109–08202	PERNO BOLT	1					
31	BC4–F144G–00	SOPORTE DE INTERRUPTOR STAY, STOP SWITCH	1					
32	92012–06010	PERNO BOLT, BUTTON HEAD	1					
33	B97–F7211–10	PEDAL DE FRENO PEDAL, BRAKE	1					
34	B97–F7262–00	PALANCA LEVER	1					
35	91312–06020	TORNILLO ALLEN BOLT, HEXAGON SOCKET HEAD	1					
36	90506–26807	RESORTE DE TENSION SPRING, TENSION	1					
37	90445–19807	TUBO HOSE	1					
38	B97–F7446–00	PLACE 2 PLATE 2	1					
39	90149–06829	TORNILLO DE REGLAJE SCREW	2					
40	90387–068P8	ESPACIADOR COLLAR	2					
41	90480–14829	TAPON GROMMET	2					
42	B97–F7114–00	TOPE STOPPER	1					
43	95817–08025	TORNILLO BOLT, FLANGE	2					
44	B97–F7311–00	PUNTAL LATERAL STAND, SIDE	1					
45	21C–F7114–00	TOPE DE PUNTAL PRINCIPAL STOPPER, MAIN STAND	1					
46	90506–23807	RESORTE DE TENSION SPRING, TENSION	1					
47	90445–19808	TUBO HOSE	1					
48	90101–10812	TORNILLO BOLT	1					
49	90387–10003	ESPACIADOR COLLAR	1					
50	90201–10841	ARANDELA PLANA WASHER, PLATE	1					
51	90185–10804	TUERCA AUTOBLOCANTE NUT, SELF-LOCKING	1					
52	B72–F7431–00	APOYAPIE POSTERIOR 1 FOOTREST, REAR 1	1					
53	B72–F7441–00	APOYAPIE POSTERIOR 2 FOOTREST, REAR 2	1					
54	91701–08035	PASADOR DE ABRAZADERA PIN	2					

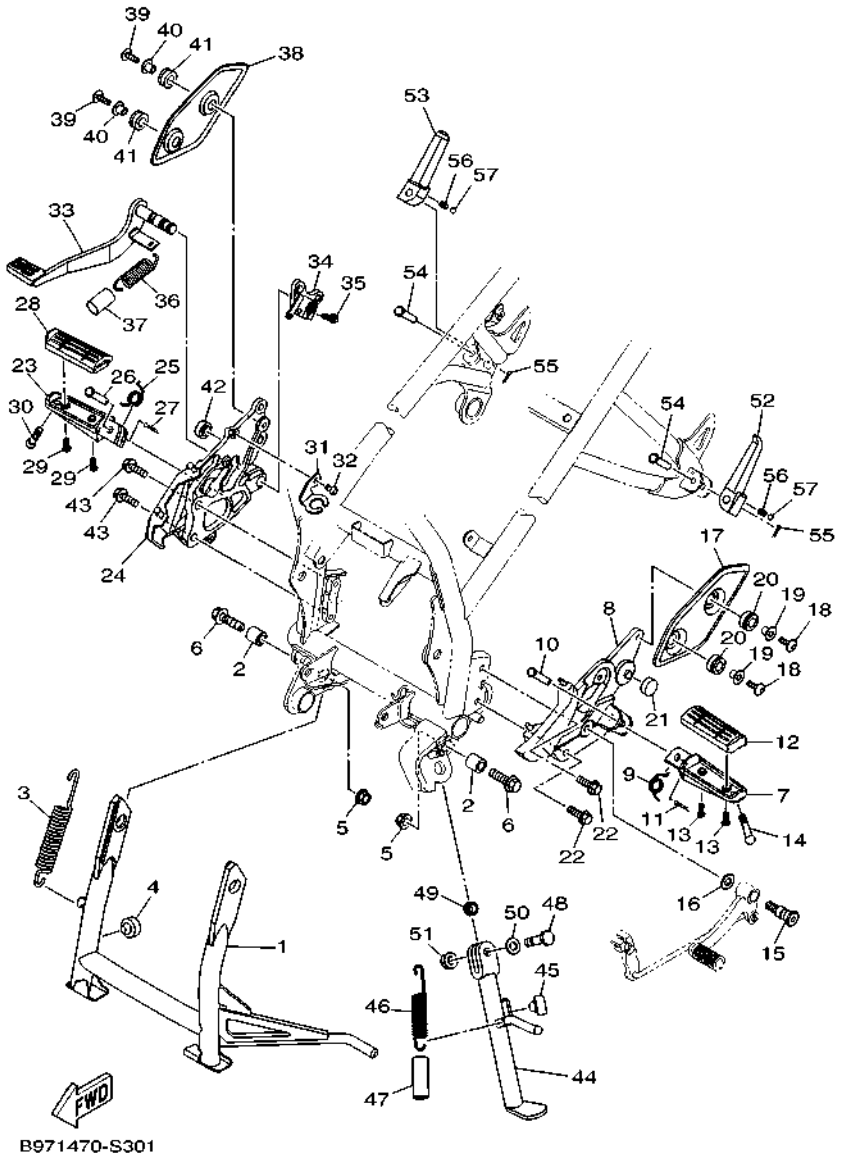

FIG. 30 SOPORTE & APOYAPIE — STAND & FOOTREST

REF. Nº	CODIGO Nº PART NO.	DESCRIPCION DESCRIPTION	B8V1					OBSERVACIONES REMARKS
55	90252–22800	PASADOR DE CHAVETA PIN, SPLIT	2					
56	90501–12743	RESORTE DE COMPRESION SPRING, COMPRESSION	2					
57	93501–04805	BOLA BALL	2					

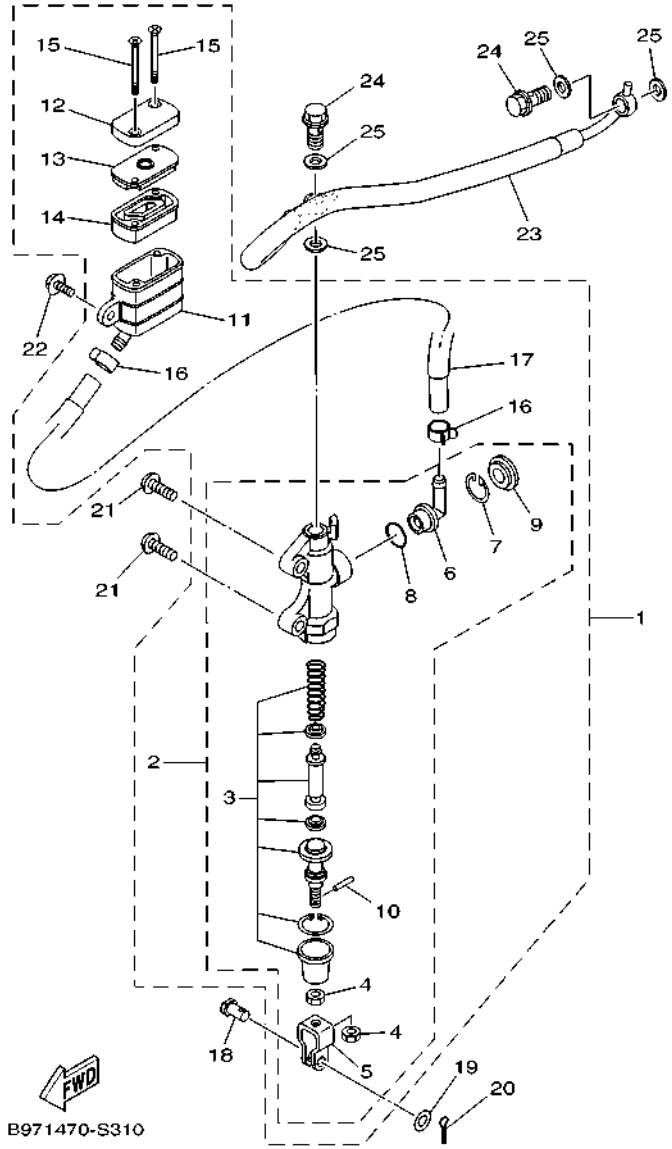

FIG. 31 CILINDRO MAESTRO TRASERO — REAR MASTER CYLINDER

REF. Nº	CODIGO Nº PART NO.	DESCRIPCION DESCRIPTION	B8V1					OBSERVACIONES REMARKS
1	B97–F580E–00	CYLINDRO MAESTRO TRASERO COMP REAR MASTER CYLINDER ASSY	1					
2	B97–F583V–00	.CILINDRO, MAESTRO TRASERO .RR. MASTER CYLINDER ASSY.	1					
3	B97–F5808–00	..JUEGO DE CILINDRO MAESTRO ..CYLINDER KIT, MASTER	1					
4	95302–08700	..TUERCA ..NUT, HEXAGON	2					
5	2YK–F7222–00	..UNION ..JOINT	1					
6	4ML–F582A–50	..CONECTOR ..JOINT	1					
7	2VN–F5866–00	..PRESILLA REDONDA ..CIRCLIP	1					
8	93210–15620	..ANILLO O ..O-RING	1					
9	3FV–F589A–00	..CUBIERTA PARA POLVO ..COVER, DUST	1					
10	4TT–F7238–00	..PASADOR ..PIN	1					
11	20P–F5894–00	.TANQUE DE RESERVA .TANK, RESERVOIR	1					
12	54C–F5852–00	.TAPA DE TANQUE DE RESERVA .CAP, RESERVOIR	1					
13	20P–F585B–00	.PLACA, DIAFRAGMA .PLATE, DIAPHRAGM	1					
14	20P–F5854–00	.EMPAQUE,DIAFRAGMA .DIAPHRAGM, RESERVOIR	1					
15	98707–04045	.TORNILLO DE CABEZA PLANA .SCREW, FLAT HEAD	2					
16	90467–12085	.PRESILLA .CLIP	2					
17	20P–F5895–00	.MANGUERA DE TANQUE DE RESERVA .HOSE, RESERVOIR	1					
18	90240–08005	PASADOR CON HOYO PIN, CLEVIS	1					
19	90201–08066	ARANDELA PLANA WASHER, PLATE	1					
20	90252–18800	PASADOR DE CHAVETA PIN, COTTER	1					
21	92012–08020	PERNO BOLT, BUTTON HEAD	2					
22	90159–06844	TORNILLO CON VALONA SCREW, WITH WASHER	1					
23	B97–F5873–00	MANGUERA DE FRENO 2 HOSE, BRAKE 2	1					
24	90401–10820	PERNO DE UNION BOLT, UNION	2					
25	90201–10118	ARANDELA PLANA WASHER, PLATE	4					

FIG. 32 GENERADOR — GENERATOR

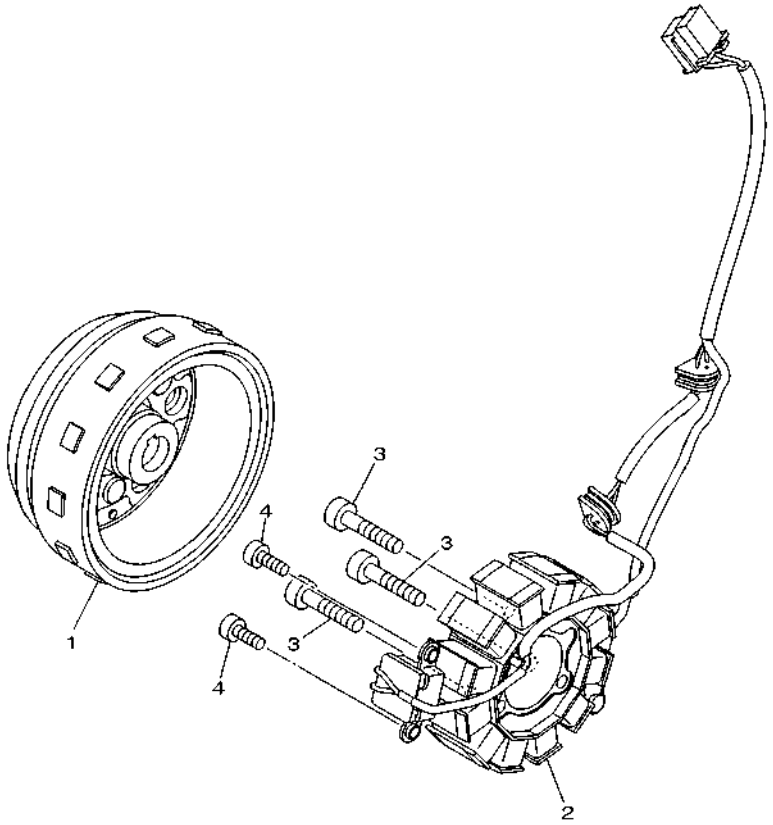

B971470-S320

REF. Nº	CODIGO Nº PART NO.	DESCRIPCION DESCRIPTION	B8V1					OBSERVACIONES REMARKS
1	B97–H1450–00	ROTOR COMPLETO ROTOR ASSY	1					
2	B97–H1410–00	ESTATOR COMPLETO STATOR ASSY	1					
3	91312–06030	TORNILLO ALLEN BOLT, HEXAGON SOCKET HEAD	3					
4	91312–05012	TORNILLO ALLEN BOLT, HEXAGON SOCKET HEAD	2					

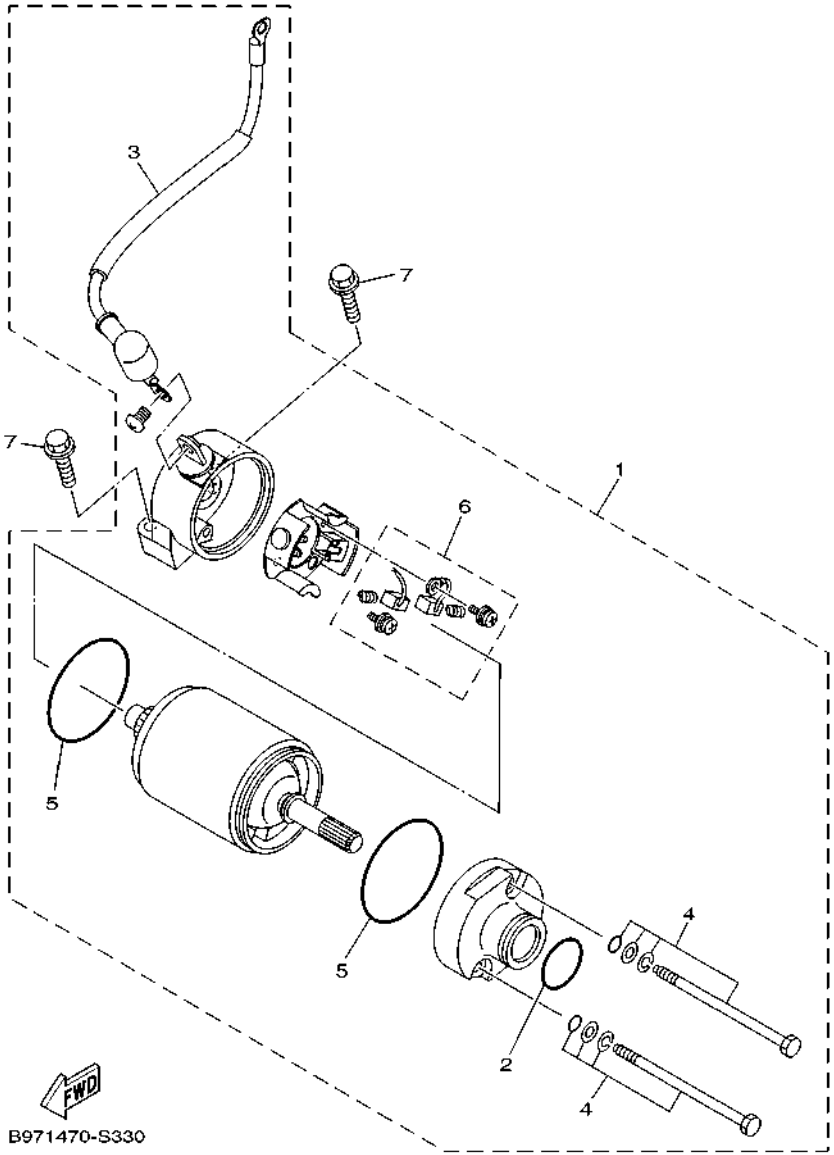

FIG. 33 MOTOR DE ARRANQUE — STARTING MOTOR

REF. Nº	CODIGO Nº PART NO.	DESCRIPCION DESCRIPTION	B8V1					OBSERVACIONES REMARKS
1	B97–H1800–20	MOTOR DE ARRANQUE COMPLETO STARTING MOTOR ASSY	1					
2	B97–H182R–20	.ANILLO EN O .O-RING	1					
3	B97–H183G–20	.CABLE DEL MOTOR COMPL. .CORD COMP.	1					
4	B97–H1828–20	.TORNILLO DE EMPUJE 2 .BOLT 2	2					
5	B97–H182M–20	.ANILLO EN O .O-RING	2					
6	B97–H1801–20	.JUEGO DE ESCOBILLA .BRUSH SET	1					
7	90105–06836	TORNILLO BOLT, FLANGE	2					

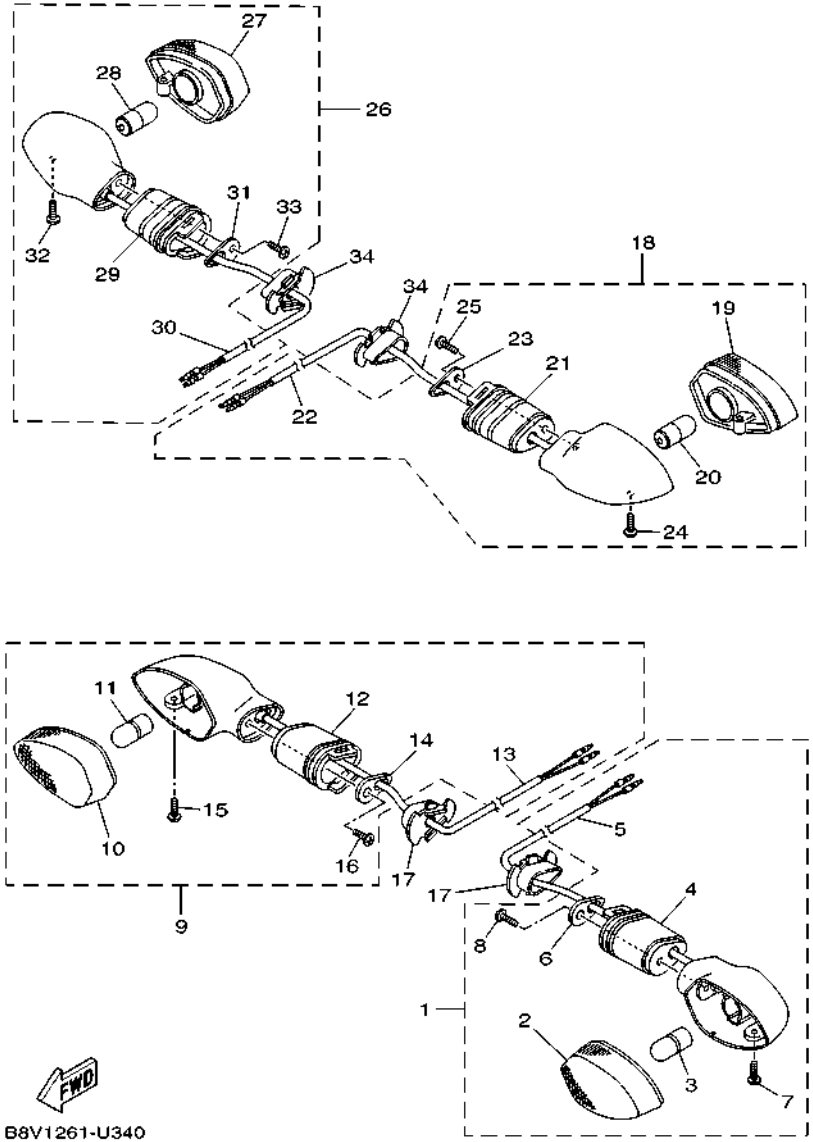

FIG. 34 LUZ DE DESTELLADOR — FLASHER LIGHT

REF. Nº	CODIGO Nº PART NO.	DESCRIPCION DESCRIPTION	B8V1					OBSERVACIONES REMARKS
1	B8V–H3310–00	DESTELLADOR DE LUZ DELANT. FRONT FLASHER LIGHT ASSY 1	1					
2	B1L–H333A–00	.LENTES COMPLETO 1 .LENS COMP 1	1					
3	B1L–H3311–00	.BOMBILLA (12V-10W) .BULB, FLASHER (12V-10W)	1					
4	45D–H3318–00	.SOPORTE DE DESTELLADOR 1 .STAY, FLASHER 1	1					
5	B1L–H331E–00	.CORDON COMPLETO .CORD ASSY	1					
6	45D–H3618–00	.PLACA .PLATE	1					
7	45D–H3333–00	.TORNILLO ACCESORIO DE LENTE .SCREW, LENS FITTING	1					
8	45D–H2133–00	.TORNILLO ACCESORIO .SCREW, FITTING	1					
9	B8V–H3320–00	DESTELLADOR DE LUZ DELANT. FRONT FLASHER LIGHT ASSY 2	1					
10	B1L–H334A–00	.LENTES COMPLETO 2 .LENS COMP 2	1					
11	B1L–H3311–00	.BOMBILLA (12V-10W) .BULB, FLASHER (12V-10W)	1					
12	45D–H3318–00	.SOPORTE DE DESTELLADOR 1 .STAY, FLASHER 1	1					
13	B1L–H332E–00	.CABLE COMPL. .CORD ASSY	1					
14	45D–H3618–00	.PLACA .PLATE	1					
15	45D–H3333–00	.TORNILLO ACCESORIO DE LENTE .SCREW, LENS FITTING	1					
16	45D–H2133–00	.TORNILLO ACCESORIO .SCREW, FITTING	1					
17	2LP–H3318–00	SOPORTE DE DESTELLADOR 1 STAY, FLASHER 1	2					
18	B1L–H3330–00	DESTELLADOR DE LUZ TRAS.COMPL. REAR FLASHER LIGHT ASSY 1	1					
19	B1L–H334A–00	.LENTES COMPLETO 2 .LENS COMP 2	1					
20	B1L–H3311–00	.BOMBILLA (12V-10W) .BULB, FLASHER (12V-10W)	1					
21	45D–H3318–00	.SOPORTE DE DESTELLADOR 1 .STAY, FLASHER 1	1					
22	B1L–H334E–00	.CABLE COMPLETA .CORD ASSY	1					
23	45D–H3618–00	.PLACA .PLATE	1					
24	45D–H3333–00	.TORNILLO ACCESORIO DE LENTE .SCREW, LENS FITTING	1					
25	45D–H2133–00	.TORNILLO ACCESORIO .SCREW, FITTING	1					
26	B1L–H3340–00	DESTELLADOR DE LUZ TRAS.COMPL. REAR FLASHER LIGHT ASSY 2	1					
27	B1L–H333A–00	.LENTES COMPLETO 1 .LENS COMP 1	1					

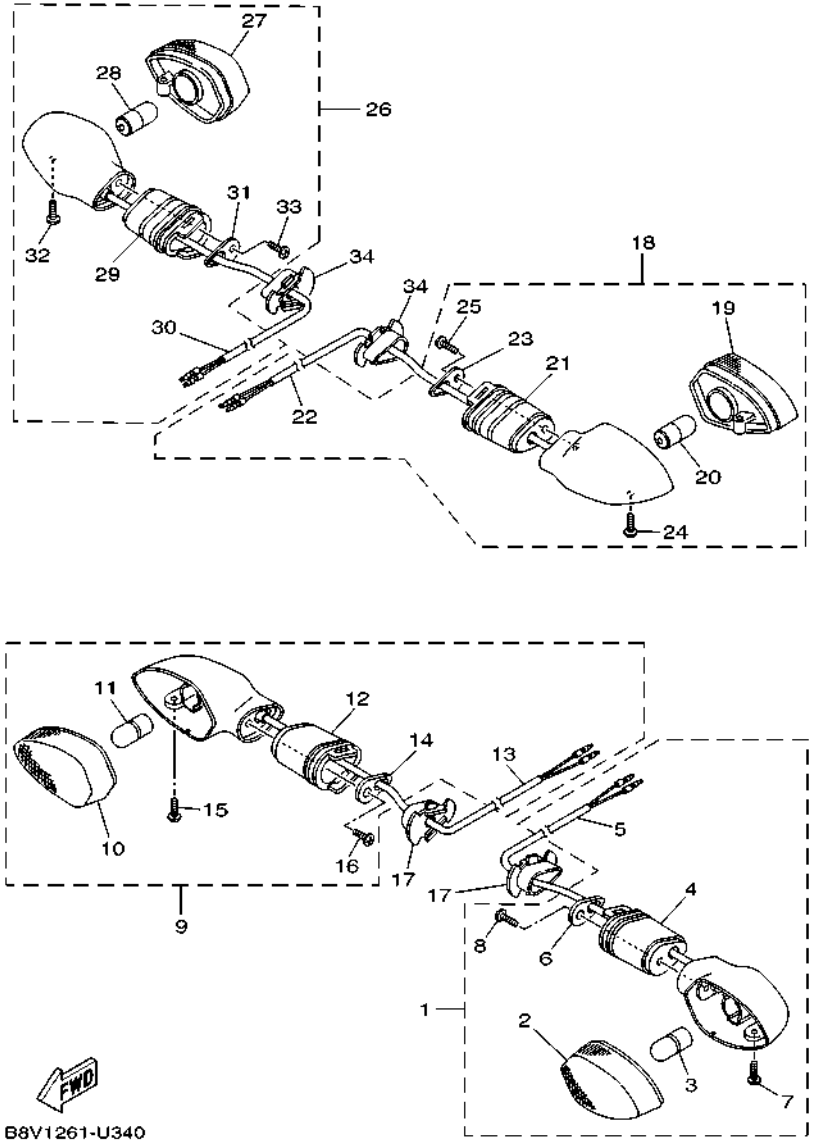

FIG. 34 LUZ DE DESTELLADOR — FLASHER LIGHT

REF. Nº	CODIGO Nº PART NO.	DESCRIPCION DESCRIPTION	B8V1					OBSERVACIONES REMARKS
28	B1L–H3311–00	.BOMBILLA (12V-10W) .BULB, FLASHER (12V-10W)	1					
29	45D–H3318–00	.SOPORTE DE DESTELLADOR 1 .STAY, FLASHER 1	1					
30	B1L–H333E–00	.CABLE COMPLETA .CORD ASSY	1					
31	45D–H3618–00	.PLACA .PLATE	1					
32	45D–H3333–00	.TORNILLO ACCESORIO DE LENTE .SCREW, LENS FITTING	1					
33	45D–H2133–00	.TORNILLO ACCESORIO .SCREW, FITTING	1					
34	5YY–H3318–10	SOPORTE DE DESTELLADOR 1 STAY, FLASHER 1	2					

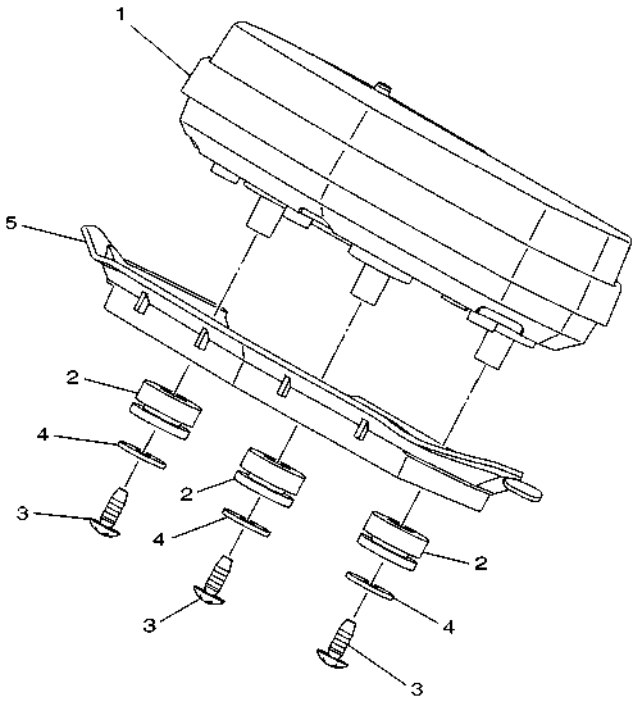

B971470-S350

FIG. 35 MEDIDOR — METER

REF. Nº	CODIGO Nº PART NO.	DESCRIPCION DESCRIPTION	B8V1					OBSERVACIONES REMARKS
1	B97–H3500–00	METRO COMPLETO METER ASSY	1					
2	90480–14830	TAPON GROMMET	3					
3	97702–50014	TORNILLO ROSCA HEMBRA SCREW, TAPPING	3					
4	90201–05036	ARANDELA PLANA WASHER, PLATE	3					
5	B97–H3615–00	PANTALLA, MEDIDOR BLIND, METER	1					

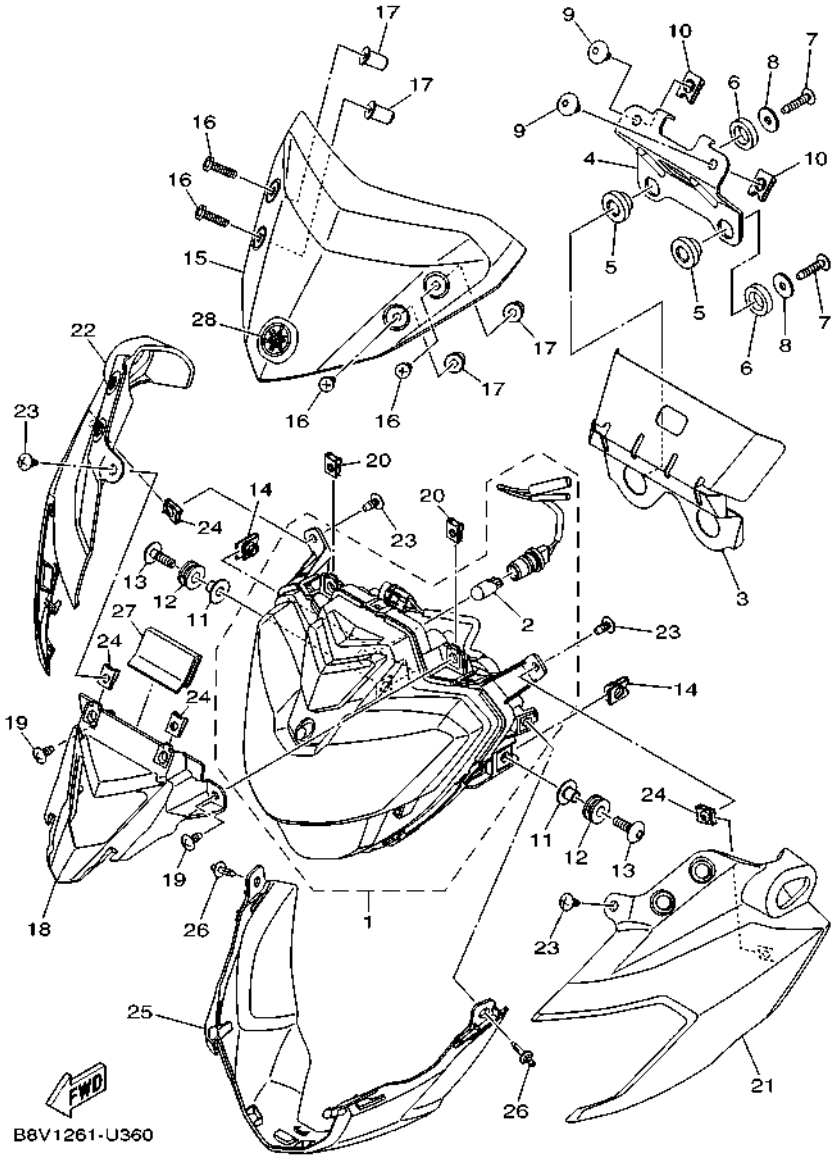

FIG. 36 FARO DELANTERO — HEADLIGHT

REF. Nº	CODIGO Nº PART NO.	DESCRIPCION DESCRIPTION	B8V1					OBSERVACIONES REMARKS
1	B97–H4300–10	FARO DELANTERO COMPLETO HEADLIGHT ASSY	1					
2	2LP–H4347–00	.AMPOLLETA (12V-5W) .BULB (12V-5W)	1					
3	B97–H816G–00	CUBIERTA CONECTOR COVER CONNECTER	1					
4	B97–F3175–00	APOYO SOPORTE FARO DELANT.1 BRACKET, HEADLIGHT STAY 1	1					
5	90480–14832	TAPON GROMMET	2					
6	B97–H4554–00	ARANDELA ESPECIAL WASHER, SPECIAL	2					
7	97702–50025	TORNILLO ROSCA HEMBRA SCREW, TAPPING	2					
8	90201–05036	ARANDELA PLANA WASHER, PLATE	2					
9	90111–06096	TORNILLO BOLT,HEX. SOCKET BUTTON	2					
10	90183–06818	TUERCA DE RESORTE NUT, SPRING	2					
11	90387–068C5	ESPACIADOR COLLAR	2					
12	90480–12815	TAPON GROMMET	2					
13	90149–06829	TORNILLO DE REGLAJE SCREW	2					
14	90183–06818	TUERCA DE RESORTE NUT, SPRING	2					
15	B8V–F3121–00–P0	CUBIERTA SUPERIOR 1 COVER, UPPER 1	1					SMX SMX
16	98902–05020	TORNILLO DE LIGAR SCREW, BIND	4					
17	90179–05804	TUERCA NUT	4					
18	B97–F3131–00	CUBIERTA SUPERIOR 2 COVER, UPPER 2	1					
19	97702–50012	TORNILLO ROSCA HEMBRA SCREW, TAPPING	2					
20	90183–05807	TUERCA DE RESORTE NUT, SPRING	2					
21	B8V–F3122–00–P0	CUBIERTA EXTERIOR 1 COVER, OUTER 1	1					UR PARA SMX UR FOR SMX
	B8V–F3122–00–P1	CUBIERTA EXTERIOR 1 COVER, OUTER 1	1					UR PARA MBL2 UR FOR MBL2
	B8V–F3122–00–P2	CUBIERTA EXTERIOR 1 COVER, OUTER 1	1					UR PARA MDPBM1 UR FOR MDPBM1
22	B8V–F3132–00–P0	CUBIERTA EXTERIOR 2 COVER, OUTER 2	1					UR PARA SMX UR FOR SMX
	B8V–F3132–00–P1	CUBIERTA EXTERIOR 2 COVER, OUTER 2	1					UR PARA MBL2 UR FOR MBL2
	B8V–F3132–00–P2	CUBIERTA EXTERIOR 2 COVER, OUTER 2	1					UR PARA MDPBM1 UR FOR MDPBM1
23	97702–50012	TORNILLO ROSCA HEMBRA SCREW, TAPPING	4					

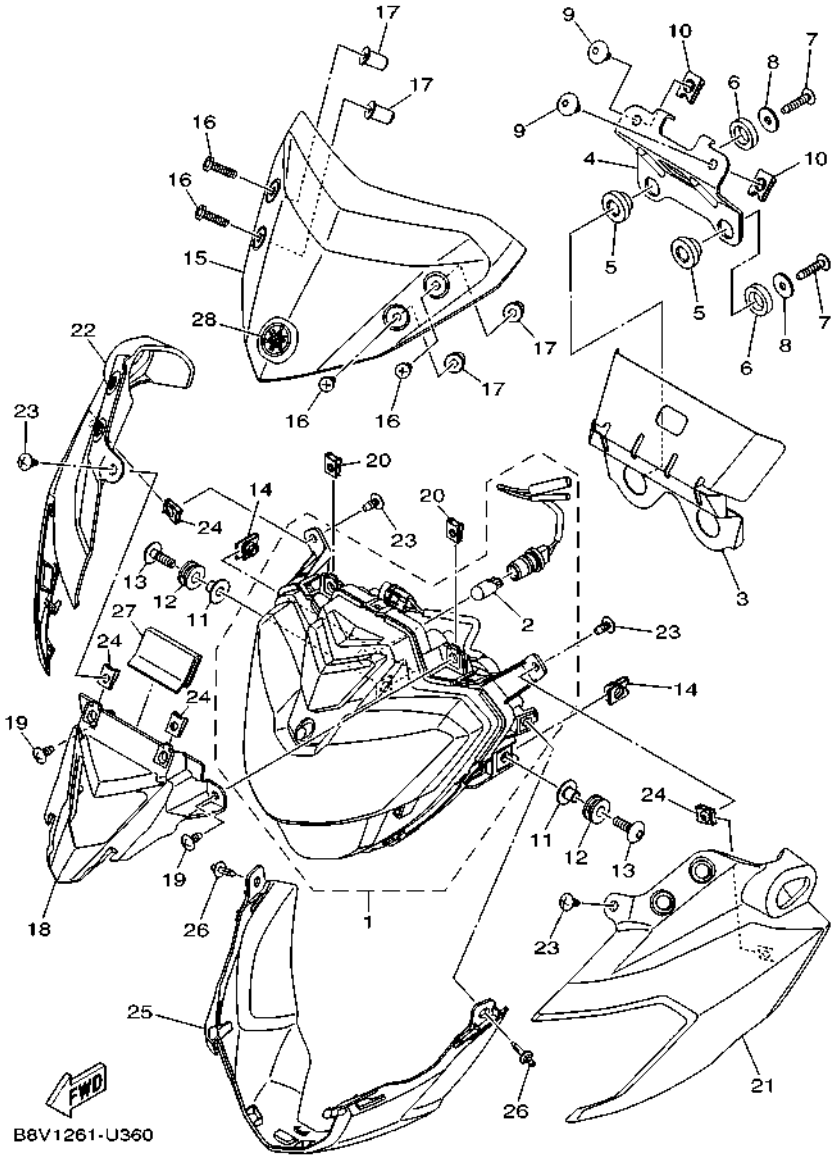

FIG. 36 FARO DELANTERO — HEADLIGHT

REF. Nº	CODIGO Nº PART NO.	DESCRIPCION DESCRIPTION	B8V1					OBSERVACIONES REMARKS
24	90183–05807	TUERCA DE RESORTE NUT, SPRING	4					
25	B97–F3123–00	CUBIERTA INFERIOR COVER, UNDER 1	1					
26	90269–06813	REMACHE RIVET	2					
27	21C–F414H–00	EQUILIBRIO, CUBIERTA DAMPER, PLATE 1	1					
28	B8V–F836B–00	MARCA TUNING FORK MARK	1					

FIG. 37 LUZ DE COLA — TAILLIGHT

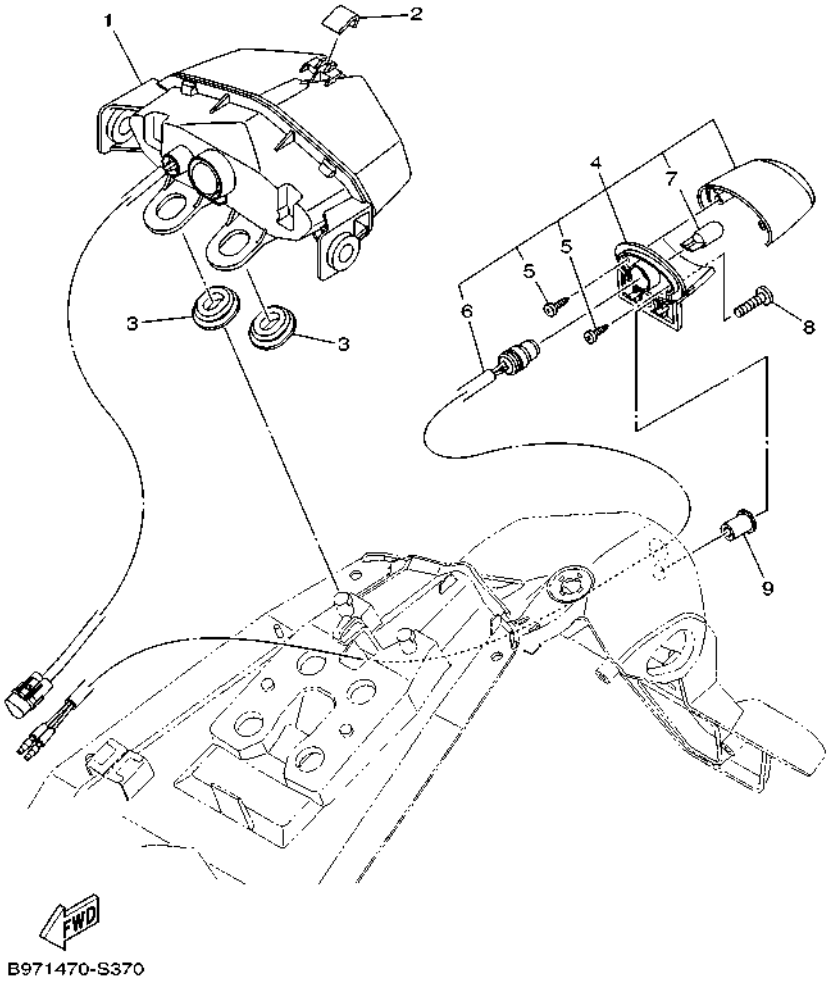

REF. Nº	CODIGO Nº PART NO.	DESCRIPCION DESCRIPTION	B8V1					OBSERVACIONES REMARKS
1	B97–H4710–00	UNIDAD FARO TRASERO COMPL. TAILLIGHT UNIT ASSY	1					
2	20P–F8371–00	AMORTIGUADOR DAMPER	1					
3	90480–01559	TAPON GROMMET	2					
4	B97–H4740–00	LUZ DE LICENCIA COMPLETA LICENCE LIGHT ASSY	1					
5	1CK–H4726–00	.TORNILLO .SCREW	2					
6	B97–H4547–00	.CABLE DE LUZ DE LICENCIA .CORD, LICENCE LIGHT	1					
7	2ND–H4744–00	.BOMBILLA (12V-5W) .BULB (12V-5W)	1					
8	98507–05020	TORNILLO DE CABEZA PLANA SCREW, PAN HEAD	1					
9	90179–05804	TUERCA NUT	1					

FIG. 38 INTERRUPTOR DE MANILLAR&PALANC HANDLE SWITCH & LEVER

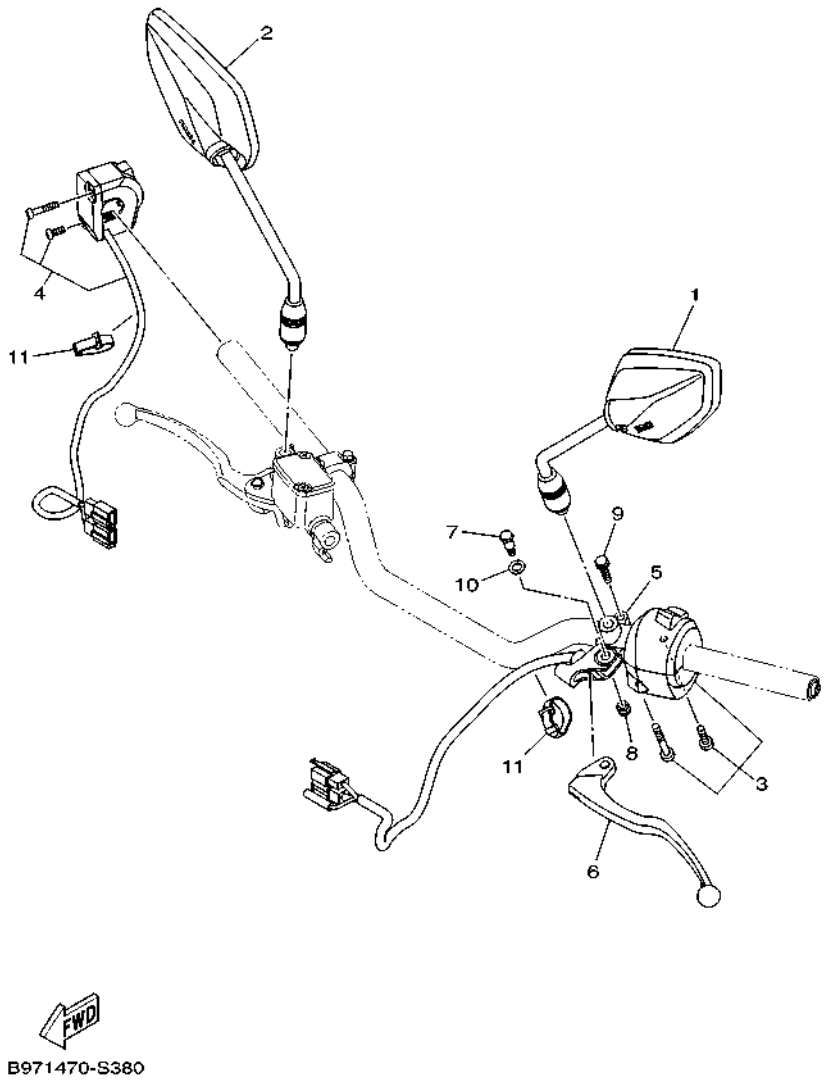

REF. Nº	CODIGO Nº PART NO.	DESCRIPCION DESCRIPTION	B8V1					OBSERVACIONES REMARKS
1	B97–F6280–00	ESPEJO COMPLETO (IZQUIERDO) REAR VIEW MIRROR ASSY (LEFT)	1					
2	B97–F6290–00	ESPEJO COMPLETO (DERECHO) REAR VIEW MIRROR ASSY (RIGHT)	1					
3	B97–H3972–00	INTERRUPTOR DE MANIJA 4 SWITCH, HANDLE 4	1					
4	B97–H3975–00	INTERRUPTOR DE MANIJA 2 SWITCH, HANDLE 2	1					
5	45D–H2911–00	SOPORTE DE LEVA 1 HOLDER, LEVER 1	1					
6	45D–H3912–00	PALANCA 1 LEVER 1	1					
7	36L–H3945–10	PERNO DE PALANCA BOLT, LEVER	1					
8	95707–06300	TUERCA DE BRIDA NUT, NYLON	1					
9	95027–06025	PERNO, DE BRIDA BOLT, FLANGE	1					
10	90201–08085	ARANDELA PLANA WASHER, PLATE	1					
11	36L–H3936–00	BANDA DE CABLE DE INTERRUPTOR BAND, SWITCH CORD	2					

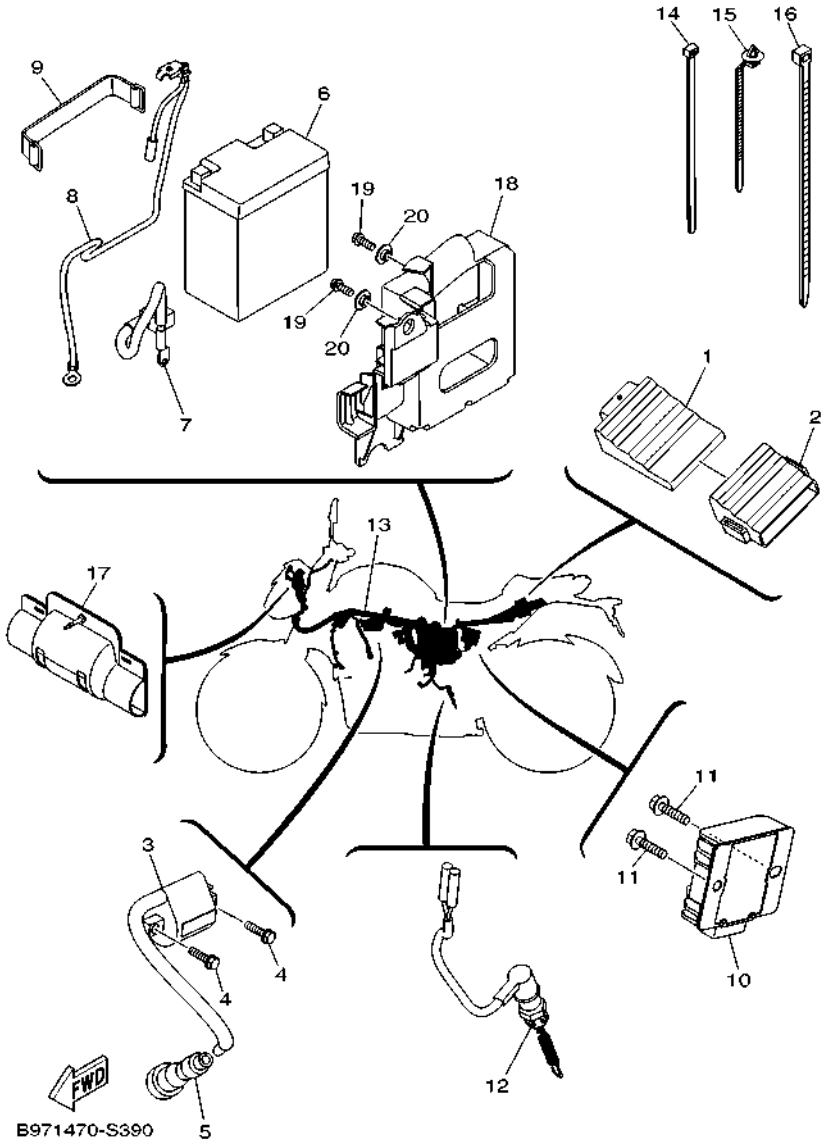

FIG. 39 EQUIPO ELECTRICO 1 — ELECTRICAL 1

REF. Nº	CODIGO Nº PART NO.	DESCRIPCION DESCRIPTION	B8V1					OBSERVACIONES REMARKS
1	B97–H591A–00	UNIDAD CONTROL ENGINE CONTROL UNIT ASSY	1					
2	B97–F1646–00	BANDA BAND	1					
3	2S5–H2310–01	BOBINA DE ENCENDIDO COMPLETA IGNITION COIL ASSY	1					
4	97502–05520	PERNO CON ARANDELA BOLT, WITH WASHER	2					
5	20P–H2370–02	TAPON DE BUJIA COMPLT PLUG CAP ASSY	1					
6	1WD–H2100–00	BATERIA COMPLETA (GS GTZ8V) BATTERY ASSY (GS GTZ8V)	1					
7	2GS–H2115–00	CABLE CONDUCTOR POSITIVO WIRE, PLUS LEAD	1					
8	2GS–H2116–00	CABLE CONDUCTOR NEGATIVO WIRE, MINUS LEAD	1					
9	5YY–H2131–10	TIRANTE DE BATERIA BAND, BATTERY	1					
10	B97–H1960–00	RECTIFICADOR Y REGULADOR RECTIFIER & REGULATOR ASSY	1					
11	95807–06025	TORNILLO BOLT, FLANGE	2					
12	B97–H2530–00	INTERRUPTOR DE PARADA COMPLETO STOP SWITCH ASSY	1					
13	B97–H2590–00	CONJUNTO DE CABLES WIRE HARNESS ASSY	1					
14	90464–16061	BRIDA CLAMP	3					
15	90464–36801	BRIDA CLAMP	4					
16	90464–50800	BRIDA CLAMP	2					
17	B97–H2599–00	CUBIERTA DE CONECTOR COVER, CONNECTOR	1					
18	B97–F177G–00	CAJA DE BATERIA BOX, BATTERY	1					
19	95022–06016	PERNO, DE BRIDA BOLT, FLANGE	2					
20	90387–068S1	ESPACIADOR COLLAR	2					

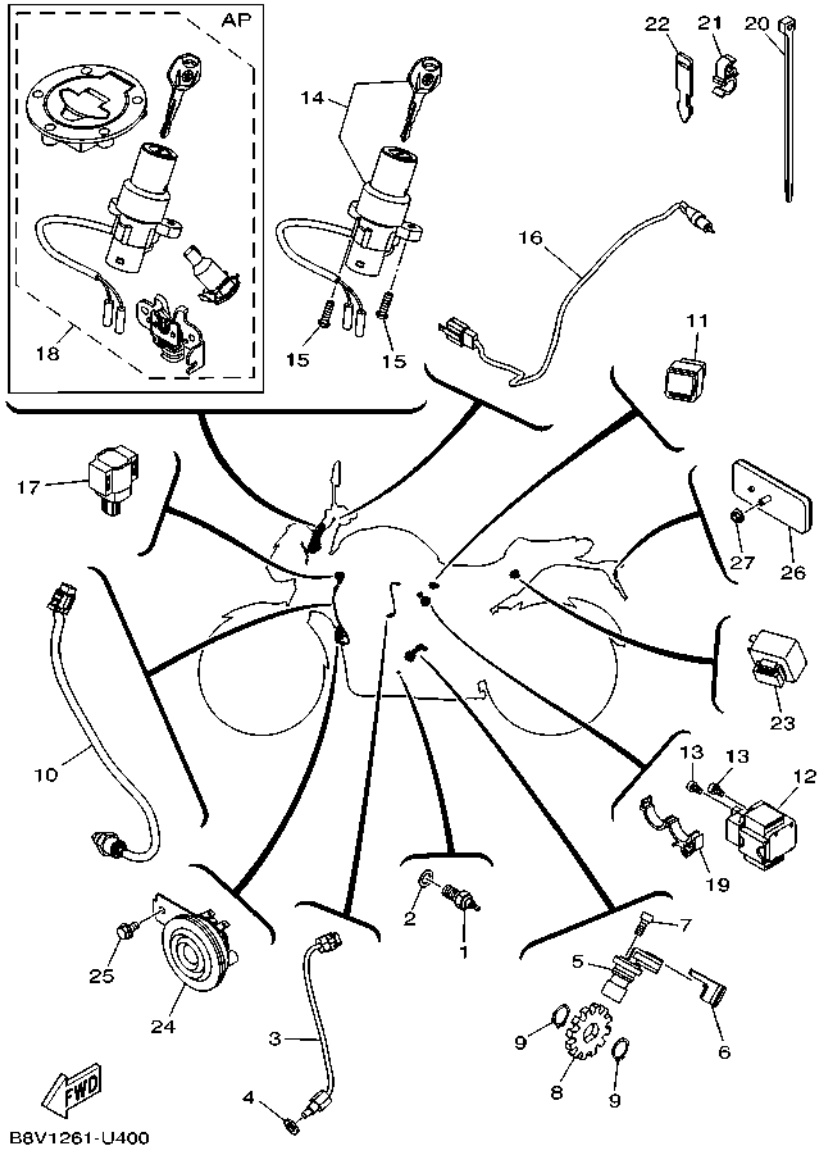

FIG. 40 EQUIPO ELECTRICO 2 — ELECTRICAL 2

REF. Nº	CODIGO Nº PART NO.	DESCRIPCION DESCRIPTION	B8V1					OBSERVACIONES REMARKS
1	21C–H2540–00	INTERRUPTOR NEUTRAL COMPL NEUTRAL SWITCH ASSY	1					
2	90430–10148	JUNTA GASKET	1					
3	B97–H3591–00	UNIDAD TERMOSTATO THERMO UNIT	1					
4	90201–08841	ARANDELA PLANA WASHER, PLATE	1					
5	B97–H3755–00	SENSOR DE VELOCIDAD SENSOR, SPEED	1					
6	B97–H6251–00	GUIA DE SENSOR SENSOR, GUIDE	1					
7	91312–06014	TORNILLO ALLEN BOLT, HEXAGON SOCKET HEAD	1					
8	B97–H354W–00	ROTOR ROTOR	1					
9	93410–17037	SEGURO CIRCLIP	2					
10	B97–H592A–00	SENSOR SENSOR, OXYGEN	1					
11	5YY–H1950–10	RELE COMPLETO RELAY ASSY	1					
12	54B–H1940–01	CONJUNTO ARRANCADOR RELEVO STARTER RELAY ASSY	1					
13	91312–05008	TORNILLO ALLEN BOLT, HEXAGON SOCKET HEAD	2					
14	B97–H2501–01	LLAVE DE IGNICION COMPLT MAIN SWITCH STEERING LOCK	1					
15	90149–06118	TORNILLO DE REGLAJE SCREW	2					
16	21C–H2917–02	INTERRUPTOR SWITCH	1					
17	1PA–H2576–00	SENSOR ANGULO DE INCLINATION SENSOR, LEAN ANGLE	1					
18	B97–XH250–11	LLAVE DE IGNICION COMPLT MAIN SW. STRG. LOCK SUB ASSY	1					AP AP
19	90464–16006	BRIDA CLAMP	1					
20	90464–65001	BRIDA CLAMP	1					
21	90464–09018	BRIDA CLAMP	1					
22	BC4–H2591–00	BANDA BAND	1					
23	5KA–H3350–00	RELE DE DESTELLADOR COMPL. FLASHER RELAY ASSY	1					
24	2GS–H3371–01	BOCINA HORN	1					
25	95827–06012	TORNILLO BOLT, FLANGE	1					
26	5US–H5110–01	REFLECTOR COMPLETO REFLECTOR ASSY	1					
27	95707–05500	TUERCA DE BRIDA NUT, FLANGE	1					

INDICE NUMERICO
NUMERICAL INDEX

CODIGO Nº PART NO.	REF. Nº
1S4–11181–10	1 – 4
5H0–12111–02	3 – 1
5XT–12210–00	4 – 11
1S4–14104–00	6 – 10
2S5–1410H–00	6 – 6
1S4–14216–00	6 – 7
4FM–23125–40	20 – 6
	20 – 25
5XT–25802–50	27 – 5
3JD–25803–50	27 – 6
5XT–25827–00	27 – 15
3SP–25919–51	27 – 9
3SP–25924–51	27 – 13
3SP–25926–51	27 – 12
B97–E1111–00	1 – 1
B97–E111F–00	1 – 18
B97–E1145–00	4 – 4
B97–E1165–00	1 – 11
B97–E1166–00	6 – 29
B97–E1186–00	1 – 16
B97–E1190–00	1 – 10
B97–E1196–00	1 – 12
1S4–E1311–21–A0	1 – 21
B97–E1351–01	1 – 22
B97–E1400–00	2 – 1
B97–E1454–00	2 – 15
B97–E1478–00	2 – 17
B97–E1496–00	2 – 19
B97–E1531–00	2 – 18
B97–E1533–00	2 – 20
B97–E1536–00	2 – 14
B97–E1549–00	2 – 10
B97–E1603–00	2 – 7
B97–E1631–00	2 – 6
12B–E1633–00	2 – 8
B97–E2113–00	3 – 4
B97–E2114–00	3 – 5
B97–E2116–00	3 – 3
B97–E2117–00	3 – 7
5BP–E2118–00	3 – 8
5BP–E2119–00	3 – 6
B97–E2121–00	3 – 2
B97–E2146–00	3 – 11
B97–E2151–00	3 – 9
B97–E2156–00	3 – 10
B97–E2159–00	3 – 13
B97–E2170–00	4 – 1
B97–E2176–00	4 – 3

CODIGO Nº PART NO.	REF. Nº
B97–E2213–00	4 – 12
B97–E2231–00	4 – 9
B97–E2241–00	4 – 10
B97–E3161–00	5 – 16
B97–E3300–00	5 – 1
B97–E3326–00	5 – 2
B97–E3329–00	5 – 6
4LS–E3411–00	5 – 9
38B–E3440–00	5 – 10
B97–E3447–00	5 – 11
B97–E3464–00	5 – 30
B97–E3465–00	5 – 31
B97–E3470–00	5 – 24
B97–E3585–00	6 – 1
B8H–E3750–00	6 – 5
B97–E3770–00	6 – 12
B97–E3907–00	21 – 22
B97–E3971–00	21 – 26
5CA–E4147–00	6 – 13
B97–E4411–00	6 – 15
B97–E4412–00	6 – 16
B97–E4437–00	6 – 25
20P–E443E–00	6 – 22
B97–E4450–00	6 – 17
2GS–E4452–00	6 – 19
B97–E4453–00	6 – 18
1S4–E4571–00	6 – 8
B97–E4613–00	7 – 7
B97–E4703–01	7 – 1
B97–E4718–00	7 – 2
B97–E4728–00	7 – 3
20P–E4747–00	15 – 19
B97–E475P–00	7 – 6
B97–E4799–00	7 – 4
B97–E4877–00	6 – 20
B97–E5111–00	8 – 1
B97–E5113–00	9 – 13
B97–E5121–00	8 – 2
B97–E5362–00	9 – 24
B97–E5411–00	9 – 1
B97–E5415–00	9 – 26
B97–E5418–00	9 – 14
B97–E5421–00	9 – 16
B97–E5441–00	8 – 9
B97–E5451–00	9 – 6
B97–E5461–00	9 – 17
B97–E5512–00	10 – 1
B97–E5515–00	10 – 5

CODIGO Nº PART NO.	REF. Nº
B97–E5517–00	10 – 3
B97–E5521–00	10 – 2
B97–E5522–00	10 – 4
B97–E5590–00	10 – 8
B97–E6111–00	11 – 1
54B–E6144–00	11 – 20
B97–E6150–00	11 – 6
B97–E6154–00	11 – 17
B97–E6307–00	11 – 11
B97–E6321–00	11 – 9
B97–E6324–00	11 – 8
21C–E6331–00	11 – 10
B97–E6333–00	11 – 13
B97–E6337–00	11 – 14
3C1–E6344–00	11 – 21
B97–E6345–00	11 – 27
B97–E6351–00	11 – 12
B97–E6356–10	11 – 19
B97–E6357–00	11 – 31
21C–E6358–00	11 – 18
B97–E6371–00	11 – 7
B97–E6380–00	11 – 24
1S4–E6383–00	11 – 15
B97–E6384–00	11 – 16
B97–E7211–00	12 – 12
B97–E7221–00	12 – 5
B97–E7231–00	12 – 8
B97–E7241–00	12 – 11
B97–E7251–00	12 – 10
21C–E7258–00	12 – 15
B97–E7402–00	12 – 4
B97–E7410–00	12 – 1
B97–E7558–00	12 – 17
B97–E8101–00	14 – 1
B8V–E8110–00	14 – 8
5VA–E8113–00	14 – 9
B97–E8140–00	14 – 3
B97–E8144–00	14 – 4
B97–E8511–00	13 – 2
B97–E8512–00	13 – 3
B97–E8513–00	13 – 4
B97–E8531–00	13 – 5
B97–E8540–01	13 – 1
B8V–F1110–01	15 – 1
B97–F1150–00	15 – 2
B97–F117A–00	15 – 15
1GC–F117K–00	23 – 12
2GS–F1279–00	15 – 21

CODIGO Nº PART NO.	REF. Nº
B97–F1317–00	15 – 3
B97–F1318–00	15 – 4
B8V–F137U–00–P0	22 – 16
B8V–F137U–00–P1	22 – 16
B8V–F137U–00–P2	22 – 16
B8V–F137V–00–P0	22 – 26
B8V–F137V–00–P1	22 – 26
B8V–F137V–00–P2	22 – 26
B8V–F137W–00–P0	22 – 15
B8V–F137W–00–P1	22 – 15
B8V–F137W–00–P2	22 – 15
B8V–F137X–00–P0	22 – 25
B8V–F137X–00–P1	22 – 25
B8V–F137X–00–P2	22 – 25
BC4–F144G–00	30 – 31
45D–F1511–10–P0	16 – 1
45D–F1511–10–P5	16 – 1
45D–F1511–10–P7	16 – 1
B1L–F1568–00	21 – 31
B97–F1611–01	16 – 6
B97–F1629–00	16 – 15
B97–F163A–00	16 – 18
B97–F1640–00	16 – 13
B97–F1646–00	39 – 2
B97–F1650–00	18 – 12
B8V–F1668–00	18 – 23
B8H–F1685–00	16 – 22
B97–F1711–00	17 – 1
21C–F1717–00	16 – 16
	17 – 3
	17 – 12
B97–F171A–00	21 – 29
B8V–F171E–00–P0	17 – 29
B8V–F171E–00–P1	17 – 29
B8V–F171E–00–P2	17 – 29
B97–F171L–00	17 – 9
B97–F171M–00	17 – 18
B8V–F171X–00–P0	17 – 35
B8V–F171X–00–P1	17 – 35
B8V–F171X–00–P2	17 – 35
B97–F1721–00	17 – 10
B8V–F172A–00–P0	17 – 6
B8V–F172A–00–P1	17 – 6
B8V–F172F–00–P0	17 – 15
B8V–F172F–00–P1	17 – 15
B97–F172X–00	17 – 41
B97–F1731–00	17 – 19
B97–F1741–00	17 – 24

CODIGO Nº PART NO.	REF. Nº
B97–F174X–00	17 – 8
B97–F174Y–00	17 – 17
45S–F1778–00	15 – 23
B97–F177G–00	39 – 18
20P–F2129–00	18 – 2
2GS–F2141–00	18 – 5
B97–F2151–00	18 – 8
B97–F2174–00	26 – 23
B97–F2210–00	18 – 16
B8V–F2263–00	18 – 22
21C–F2674–00	20 – 19
	20 – 38
B8V–F3100–00	20 – 1
B97–F3102–00	20 – 2
B97–F3103–00	20 – 21
21C–F3110–00	20 – 4
	20 – 23
21C–F3111–00	20 – 17
	20 – 36
21C–F3114–00	20 – 18
	20 – 37
B97–F3118–00	20 – 16
	20 – 35
B8V–F3121–00–P0	36 – 15
B8V–F3122–00–P0	36 – 21
B8V–F3122–00–P1	36 – 21
B8V–F3122–00–P2	36 – 21
B97–F3123–00	36 – 25
21C–F3126–11	20 – 3
B97–F3131–00	36 – 18
B8V–F3132–00–P0	36 – 22
B8V–F3132–00–P1	36 – 22
B8V–F3132–00–P2	36 – 22
B97–F3136–00	20 – 22
B97–F3141–00	20 – 14
	20 – 33
2GS–F3144–00	20 – 10
	20 – 29
2GS–F3145–00	20 – 8
	20 – 27
21C–F3146–00	20 – 7
	20 – 26
21C–F3149–00	20 – 15
	20 – 34
21C–F3156–00	20 – 9
	20 – 28
21C–F3158–00	20 – 12
	20 – 31

CODIGO Nº PART NO.	REF. Nº
B97–F3170–00	20 – 5
	20 – 24
2GS–F3171–00	20 – 20
	20 – 39
21C–F3173–00	20 – 11
	20 – 30
B97–F3175–00	36 – 4
B97–F317E–00	19 – 14
B97–F317F–00	19 – 16
21C–F317J–00	19 – 15
21C–F3181–00	20 – 13
	20 – 32
21C–F3340–00	20 – 40
21C–F3346–00	20 – 43
21C–F3411–00	20 – 42
21C–F3412–00	19 – 1
5YY–F3416–00	19 – 4
20P–F3418–00	19 – 6
4LS–F341E–10	19 – 2
B97–F3435–00	19 – 8
B97–F3441–00	19 – 12
B97–F3441–10	19 – 12
5YY–F3462–00	20 – 41
B8V–F4110–01	21 – 1
2LP–F411J–00	15 – 22
B97–F411J–00	15 – 24
B97–F4121–00	22 – 18
B97–F4122–00	22 – 28
B8V–F4129–00–P0	22 – 1
B8V–F4129–00–P1	22 – 1
B8V–F4129–00–P2	22 – 1
B8V–F4139–00–P0	22 – 8
B8V–F4139–00–P1	22 – 8
B8V–F4139–00–P2	22 – 8
B84–F413B–00	22 – 35
B97–F414F–00	21 – 21
21C–F414H–00	21 – 14
	36 – 27
21C–F4181–00	21 – 5
21C–F4183–00	21 – 16
B97–F4188–00	21 – 12
B97–F4191–00	21 – 6
B8V–F4244–00	22 – 36
B8V–F4244–10	22 – 36
B8V–F4244–20	22 – 36
B8V–F4245–00	22 – 37
B8V–F4245–10	22 – 37
B8V–F4245–20	22 – 37

INDICE NUMERICO
NUMERICAL INDEX

CODIGO Nº PART NO.	REF. Nº
20P–F4486–00	21 – 24
B97–F4491–00	21 – 23
B72–F4549–00	17 – 45
B8V–F4710–00	23 – 1
45D–F4741–00	23 – 2
	23 – 6
4LS–F4741–00	23 – 7
B97–F474A–01–P1	23 – 14
B97–F474W–01–P1	23 – 15
B8V–F4750–00	23 – 5
21C–F4780–01	23 – 8
B97–F478E–00	23 – 10
21C–F510C–10	24 – 2
B97–F5168–01–33	24 – 1
21C–F5181–00	24 – 8
1CK–F5186–00	24 – 7
B97–F530S–00	26 – 2
B97–F5338–01–33	26 – 1
B97–F5364–00	26 – 5
B97–F5366–00	26 – 6
B97–F5376–00	26 – 8
B97–F5377–00	26 – 17
21C–F5381–00	26 – 16
B97–F5383–00	26 – 18
B97–F5388–00	26 – 22
BK6–F5414–00	26 – 13
B97–F5446–00	26 – 10
B97–F5715–00	29 – 3
B97–F5806–00	27 – 4
B97–F5807–00	29 – 2
B97–F5808–00	31 – 3
B97–F580A–00	29 – 1
B97–F580E–00	31 – 1
B97–F580U–00	25 – 3
B97–F580W–00	27 – 3
5HH–F5824–00	27 – 10
5HH–F5825–51	27 – 14
4ML–F582A–50	31 – 6
B97–F582U–00	25 – 1
B97–F582W–00	27 – 1
B97–F583V–00	31 – 2
54B–F5852–00	29 – 6
54C–F5852–00	31 – 12
20P–F5854–00	31 – 14
54B–F5854–00	29 – 4
54B–F5855–00	29 – 5
20P–F585B–00	31 – 13
2VN–F5866–00	31 – 7

CODIGO Nº PART NO.	REF. Nº
B97–F5867–00	29 – 12
B97–F5872–00	29 – 15
B97–F5873–00	31 – 23
B97–F5875–00	29 – 18
B97–F5876–00	29 – 19
B97–F5887–00	18 – 15
20P–F5894–00	31 – 11
20P–F5895–00	31 – 17
3FV–F589A–00	31 – 9
54B–F589H–00	29 – 7
B97–F589H–00	29 – 14
54B–F5914–00	25 – 10
5HH–F5914–00	27 – 11
54B–F5916–00	25 – 16
54B–F5917–00	25 – 8
5HH–F5917–00	27 – 8
54B–F5919–00	25 – 12
54B–F5924–00	25 – 14
54B–F5925–00	25 – 15
54B–F5926–00	25 – 11
54B–F5937–00	25 – 7
5HH–F5937–00	27 – 7
54B–F5939–00	25 – 9
B97–F6110–00	28 – 1
B97–F6240–00	28 – 3
21C–F6241–00	28 – 2
B97–F6246–01	28 – 4
B97–F6280–00	38 – 1
B97–F6281–00	28 – 6
B97–F6282–00	28 – 7
B97–F6290–00	38 – 2
B97–F6302–00	28 – 9
B97–F6335–01	28 – 10
54B–F6338–00	29 – 10
4TL–F6372–00	28 – 11
B97–F7111–00	30 – 1
21C–F7114–00	30 – 4
	30 – 45
B97–F7114–00	30 – 21
	30 – 42
B97–F7211–10	30 – 33
2YK–F7222–00	31 – 5
4TT–F7238–00	31 – 10
45D–F7261–00	30 – 15
B97–F7262–00	30 – 34
B97–F7311–00	30 – 44
21C–F7413–01	30 – 12
	30 – 28

CODIGO Nº PART NO.	REF. Nº
B72–F7431–00	30 – 52
B72–F7441–00	30 – 53
B97–F7445–00	30 – 17
B97–F7446–00	30 – 38
45D–F7451–00	30 – 7
B97–F7452–00	30 – 8
45D–F7461–00	30 – 23
B97–F7462–00	30 – 24
B97–F8100–00	16 – 29
4UU–F811G–00	23 – 13
B8V–F836B–00	17 – 44
	36 – 28
B97–F836K–00	22 – 22
B97–F836L–00	22 – 32
20P–F8371–00	16 – 8
	37 – 2
B97–H1410–00	32 – 2
B97–H1450–00	32 – 1
B97–H1800–20	33 – 1
B97–H1801–20	33 – 6
B97–H1828–20	33 – 4
B97–H182M–20	33 – 5
B97–H182R–20	33 – 2
B97–H183G–20	33 – 3
54B–H1940–01	40 – 12
5YY–H1950–10	40 – 11
B97–H1960–00	39 – 10
1WD–H2100–00	39 – 6
2GS–H2115–00	39 – 7
2GS–H2116–00	39 – 8
5YY–H2131–10	39 – 9
45D–H2133–00	34 – 8
	34 – 16
	34 – 25
	34 – 33
2S5–H2310–01	39 – 3
20P–H2370–02	39 – 5
B97–H2501–01	40 – 14
B97–H2530–00	39 – 12
21C–H2540–00	40 – 1
1PA–H2576–00	40 – 17
B97–H2590–00	39 – 13
BC4–H2591–00	40 – 22
B97–H2599–00	39 – 17
45D–H2911–00	38 – 5
21C–H2917–02	40 – 16
B8V–H3310–00	34 – 1
B1L–H3311–00	34 – 3

CODIGO Nº PART NO.	REF. Nº
B1L–H3311–00	34 – 11
	34 – 20
	34 – 28
2LP–H3318–00	34 – 17
45D–H3318–00	34 – 4
	34 – 12
	34 – 21
	34 – 29
5YY–H3318–10	34 – 34
B1L–H331E–00	34 – 5
B8V–H3320–00	34 – 9
B1L–H332E–00	34 – 13
B1L–H3330–00	34 – 18
45D–H3333–00	34 – 7
	34 – 15
	34 – 24
	34 – 32
B1L–H333A–00	34 – 2
	34 – 27
B1L–H333E–00	34 – 30
B1L–H3340–00	34 – 26
B1L–H334A–00	34 – 10
	34 – 19
B1L–H334E–00	34 – 22
5KA–H3350–00	40 – 23
2GS–H3371–01	40 – 24
B97–H3500–00	35 – 1
B97–H354W–00	40 – 8
B97–H3591–00	40 – 3
B97–H3615–00	35 – 5
45D–H3618–00	34 – 6
	34 – 14
	34 – 23
	34 – 31
B97–H3755–00	40 – 5
45D–H3912–00	38 – 6
B97–H3922–00	29 – 8
36L–H3936–00	38 – 11
36L–H3945–10	38 – 7
B97–H3972–00	38 – 3
B97–H3975–00	38 – 4
B97–H3980–00	29 – 13
B97–H4300–10	36 – 1
2LP–H4347–00	36 – 2
B97–H4547–00	37 – 6
B97–H4554–00	36 – 6
B97–H4710–00	37 – 1
1CK–H4726–00	37 – 5

CODIGO Nº PART NO.	REF. Nº
B97–H4740–00	37 – 4
2ND–H4744–00	37 – 7
5US–H5110–01	40 – 26
2FC–H5111–00	16 – 26
B97–H591A–00	39 – 1
B97–H592A–00	40 – 10
B97–H6251–00	40 – 6
B97–H816G–00	36 – 3
B97–W0045–00	25 – 13
54B–W0047–00	25 – 5
54B–W0048–00	25 – 6
54B–W0057–00	25 – 4
B8V–WF211–01	18 – 1
54D–WF461–11	21 – 18
1GC–WF479–00	23 – 11
B97–XH250–11	40 – 18
90101–10812	30 – 48
90101–10852	4 – 6
90105–06169	21 – 7
90105–06836	33 – 7
90105–06859	29 – 11
90105–08117	1 – 6
90105–08889	11 – 25
90105–10110	15 – 10
90105–10111	15 – 13
90105–10114	15 – 11
90105–10118	15 – 12
90105–10319	25 – 17
90105–10430	2 – 11
90105–12057	18 – 18
90105–12804	18 – 19
90109–06190	14 – 5
90109–06859	29 – 9
90109–08202	30 – 14
	30 – 30
90110–05806	21 – 19
90110–08067	10 – 9
90111–06096	36 – 9
90111–06117	16 – 5
90111–06807	7 – 5
90111–06859	16 – 14
90111–08029	25 – 2
	27 – 2
90116–08023	1 – 24
90116–08812	26 – 11
90119–05801	22 – 7
	22 – 14
90123–08046	28 – 12

CODIGO Nº PART NO.	REF. Nº
90149–06118	40 – 15
90149–06829	30 – 18
	30 – 39
	36 – 13
90159–06844	31 – 22
90170–06128	3 – 14
90170–12370	2 – 24
90170–16800	11 – 5
90170–16801	11 – 23
90176–22081	19 – 11
90179–05804	36 – 17
	37 – 9
90179–08148	28 – 13
90179–08674	15 – 9
90179–10811	15 – 6
90179–10819	15 – 7
90179–18801	12 – 23
90179–25615	19 – 5
90183–05807	16 – 19
	17 – 2
	17 – 7
	17 – 11
	17 – 16
	17 – 20
	17 – 25
	17 – 30
	17 – 36
	21 – 30
	22 – 5
	22 – 12
	22 – 17
	22 – 27
	36 – 20
	36 – 24
90183–06818	36 – 10
	36 – 14
90185–10804	30 – 51
90185–14800	24 – 9
	26 – 19
90201–05036	35 – 4
	36 – 8
90201–06018	1 – 9
90201–06078	16 – 24
90201–06086	18 – 10
	21 – 3
90201–061A5	17 – 33
	17 – 39
90201–06380	21 – 11

INDICE NUMERICO
NUMERICAL INDEX

CODIGO Nº PART NO.	REF. Nº
90201–06871	14 – 11
90201–08066	31 – 19
90201–08085	38 – 10
90201–08609	1 – 7
90201–08612	7 – 9
90201–08841	40 – 4
90201–08882	5 – 4
90201–10118	31 – 25
90201–102R1	2 – 12
90201–10591	4 – 7
90201–10815	29 – 17
90201–10829	15 – 14
90201–10841	30 – 16
	30 – 50
90201–12028	18 – 7
90201–122H1	18 – 21
90201–15814	26 – 20
90201–178D3	12 – 13
90201–22018	19 – 10
90201–25291	10 – 6
90202–26142	19 – 7
90209–22191	12 – 6
90214–16063	11 – 3
90215–12272	2 – 23
90215–16293	11 – 4
90215–16800	11 – 22
90215–23265	12 – 22
90240–07105	2 – 2
90240–08005	31 – 18
90252–18800	14 – 10
	31 – 20
90252–22800	30 – 11
	30 – 27
	30 – 55
90269–06813	16 – 21
	17 – 5
	17 – 14
	17 – 23
	17 – 28
	22 – 21
	22 – 24
	22 – 31
	22 – 34
	36 – 26
90280–05013	2 – 13
90282–05077	11 – 2
90282–05804	2 – 25
90340–12808	8 – 11

CODIGO Nº PART NO.	REF. Nº
90340–14117	9 – 4
90340–32805	9 – 2
90387–06048	16 – 10
90387–066J9	18 – 9
90387–06737	6 – 26
90387–06876	5 – 26
90387–06899	22 – 4
	22 – 11
90387–068B2	21 – 8
90387–068C5	16 – 2
	36 – 11
90387–068H8	16 – 12
90387–068N2	17 – 43
	23 – 4
90387–068P8	30 – 19
	30 – 40
90387–068S1	18 – 13
	39 – 20
90387–07819	19 – 18
90387–08822	15 – 20
90387–09806	6 – 27
90387–10003	30 – 49
90387–107H6	21 – 4
90387–10822	30 – 2
90387–12845	18 – 17
90387–12863	18 – 4
90387–22027	12 – 9
90401–08007	5 – 19
90401–10046	5 – 17
90401–10818	29 – 16
90401–10820	31 – 24
90430–06802	5 – 8
90430–06817	1 – 3
	8 – 8
	9 – 23
90430–08119	5 – 20
90430–08803	11 – 26
90430–10148	40 – 2
90430–10171	5 – 18
90430–12213	8 – 12
90445–12805	21 – 27
90445–19807	30 – 37
90445–19808	30 – 47
90450–46803	6 – 14
90450–55003	6 – 4
90464–09018	40 – 21
90464–16006	40 – 19
90464–16061	39 – 14

CODIGO Nº PART NO.	REF. Nº
90464–36801	39 – 15
90464–50800	39 – 16
90464–65001	40 – 20
90464–80802	21 – 17
90465–20801	9 – 11
90467–12085	31 – 16
90467–12800	6 – 23
90467–13816	6 – 30
	6 – 31
90467–15012	21 – 28
90467–20050	6 – 21
90468–12069	2 – 9
90480–01558	17 – 22
	17 – 27
	21 – 13
90480–01559	37 – 3
90480–08801	16 – 3
90480–12805	22 – 3
	22 – 10
90480–12815	36 – 12
90480–13163	15 – 18
90480–13398	22 – 2
	22 – 9
90480–14829	30 – 20
	30 – 41
90480–14830	35 – 2
90480–14832	36 – 5
90480–15363	21 – 9
90480–16802	5 – 25
90501–07629	2 – 3
90501–12743	30 – 56
90501–22800	2 – 21
90506–23807	30 – 46
90506–26807	30 – 36
90506–35816	30 – 3
90508–183B9	30 – 9
	30 – 25
90520–02810	16 – 28
90520–07806	16 – 7
90520–08814	21 – 15
90560–06201	15 – 17
91312–05008	40 – 13
91312–05010	21 – 20
	21 – 25
91312–05012	9 – 12
	32 – 4
91312–06014	40 – 7
91312–06020	5 – 15

CODIGO Nº PART NO.	REF. Nº
91312–06020	30 – 35
91312–06025	4 – 13
	5 – 22
	28 – 5
91312–06030	32 – 3
91312–06065	1 – 23
91312–06070	5 – 14
91312–08045	1 – 8
91317–06020	6 – 3
91701–08035	30 – 54
91701–08040	30 – 10
	30 – 26
91810–14809	5 – 21
	8 – 3
	9 – 7
	9 – 18
92012–06010	30 – 32
92012–06035	5 – 7
92012–08020	31 – 21
92902–08200	23 – 17
92907–14200	24 – 10
93102–12877	11 – 29
93102–14856	14 – 7
93102–25827	12 – 20
93106–22808	24 – 3
	26 – 4
93106–26801	26 – 9
93210–07896	5 – 13
93210–09894	3 – 12
93210–10817	5 – 23
	5 – 28
93210–13802	1 – 25
93210–14899	9 – 5
93210–15620	31 – 8
93210–19809	9 – 25
93210–328A4	9 – 3
93210–39802	6 – 2
93210–54804	1 – 17
93210–548A1	5 – 12
93210–74801	9 – 28
93211–058A2	1 – 14
93306–003YN	12 – 3
93306–054YA	26 – 7
93306–203XR	12 – 18
93306–205X3	12 – 19
93306–252XG	24 – 4
	26 – 3
93306–252Y4	4 – 2

CODIGO Nº PART NO.	REF. Nº
93306–272X4	12 – 2
93306–302X8	2 – 16
93306–378Y2	2 – 5
93310–225YE	10 – 7
93315–112Y9	11 – 30
93317–318Y5	18 – 3
93399–99949	19 – 3
93410–00837	5 – 5
93410–17037	12 – 14
	40 – 9
93430–12812	14 – 2
93440–25084	12 – 7
93501–04805	30 – 57
93511–32842	11 – 32
93602–13800	2 – 4
93603–12804	5 – 3
93604–10011	4 – 5
93605–10838	2 – 22
93608–43228	14 – 6
9382R–15832	12 – 21
93900–00824	24 – 6
	26 – 15
94110–17818	24 – 5
94114–17806	26 – 14
94568–A4104	4 – 8
94568–K3136	26 – 21
94703–00333	1 – 20
95022–06010	1 – 13
95022–06012	1 – 19
95022–06016	9 – 15
	9 – 27
	17 – 42
	18 – 11
	18 – 14
	23 – 3
	39 – 19
95022–06020	1 – 15
	15 – 16
95022–06025	9 – 19
95022–06030	9 – 9
95022–06035	9 – 20
95022–06040	9 – 8
95022–06045	8 – 4
95022–06050	9 – 10
	9 – 21
	9 – 22
95022–06055	8 – 7
95022–06060	8 – 5

CODIGO Nº PART NO.	REF. Nº
95022–06070	8 – 6
95022–08035	19 – 13
95022–08040	19 – 9
95027–06010	1 – 2
	23 – 9
95027–06020	5 – 29
95027–06025	38 – 9
95302–08600	26 – 24
95302–08700	31 – 4
95602–06200	16 – 11
95602–08200	26 – 12
95602–10200	30 – 5
95607–06100	16 – 25
95607–12200	18 – 6
95612–12100	18 – 20
95702–08500	7 – 8
95707–05500	16 – 27
	40 – 27
95707–06300	38 – 8
95802–06016	16 – 23
95802–06020	16 – 4
95807–06025	39 – 11
95812–06012	19 – 19
	29 – 20
95812–06016	8 – 10
	19 – 17
95812–06025	5 – 27
95812–08025	23 – 16
95812–08035	7 – 10
95812–08040	7 – 11
95812–08080	15 – 8
95812–10035	30 – 6
95812–10085	15 – 5
95817–08025	30 – 22
	30 – 43
95822–06016	6 – 28
95822–06020	6 – 11
95822–06030	21 – 2
95827–06012	40 – 25
97012–06014	4 – 14
	16 – 9
	21 – 10
97012–06020	14 – 12
97502–05520	39 – 4
97602–05320	6 – 24
97702–50012	17 – 4
	17 – 13
	17 – 21

INDICE NUMERICO
NUMERICAL INDEX

CODIGO Nº PART NO.	REF. Nº
97702–50012	17 – 26
	17 – 31
	17 – 37
	22 – 6
	22 – 13
	22 – 20
	22 – 30
	36 – 19
	36 – 23
97702–50014	35 – 3
97702–50016	16 – 17
	22 – 19
	22 – 23
	22 – 29
	22 – 33
97702–50025	36 – 7
97707–50012	16 – 20
97707–50016	17 – 34
	17 – 40
98502–05010	6 – 9
98502–05014	30 – 13
	30 – 29
98502–06014	17 – 32
	17 – 38
98507–05020	37 – 8
98507–05040	28 – 8
98702–06012	12 – 16
98707–04045	31 – 15
98902–05020	36 – 16
99009–20500	11 – 28
99246–00120	20 – 44
99530–14016	1 – 5
	8 – 13